View this document in HTML
crestron.com/docs/9349

Product Manual

Crestron Zūm® Lighting Control

Crestron Electronics, Inc.

Original Instructions
The U.S. English version of this document is the original instructions.
All other languages are a translation of the original instructions.

Regulatory Model: M201903003

Contents

Crestron Zūm® Lighting Control

Zūm distributed lighting control system uses industry standards, such as 0-10V, DALI®, DMX and phase control all merged on an enterprise IoT network, Zūm Net. This network not only provides communication and control of your lighting, but also seamlessly integrates with Crestron® Unified Communications systems and third- party occupancy, environmental & acoustical sensors or other data related IoT devices.

All Zūm devices interface with the Zūm app, providing easy set up for all room aspects and parameters including presets, lighting levels and optimized sensor settings. Spaces or rooms can be saved and used as templates for use in other spaces, which greatly reduces the time required to start up your systems.

Load Controllers

Zūm Net and Zūm Link load controllers provide a sophisticated, wired lighting control solution for Zūm® commercial lighting systems.

ZUMNET-JBOX-16A-LV and ZUMNET-JBOX-DALI

Zūm Net devices facilitate communications between rooms via CBL-CAT5E-ZUMNET-P cables (sold separately, refer to Cables on page 17) and can be daisy-chained for network expansion. They also connect to connect to Zūm Link devices for in-room communication. The load controllers mount directly to a 4 in. square junction box.

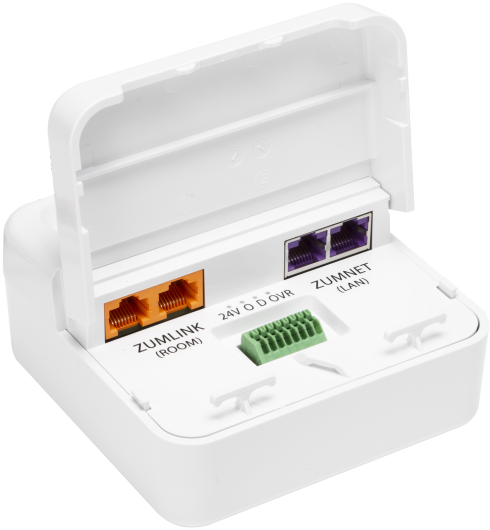

ZUMLINK-JBOX-16A-LV, ZUMLINK-JBOX-20A-SW, and ZUMLINK-JBOX-20A-PLUG

Zūm Link devices allow for in-room lighting control through compatible keypads and sensors. Two RJ-45 ports on the device and the CBL-CAT5E-ZUMLINK-P cables (sold separately refer to Cables on page 17) allow for connection to a Zūm Net device and for in-room device daisy-chaining.

ZUMLINK-EXP-16A-DIMU

The ZUMLINK-EXP-16A-DIMU is a single-channel universal dimmer and load controller designed to control a wide range of dimmable lighting load types. Using proprietary zero-cross filter technology, the ZUMLINK-EXP-16A-DIMU provides superior immunity to power line noise, resulting in significant reduction of lamp flicker.

Energy-saving options, such as Zūm link presence detectors or analog photosensors (sold separately) are available to enable daylighting, occupancy or vacancy sensing, integration, and centralized monitoring and management.

Keypad

The ZUMLINK-KP keypad provides control of one or more Zūm® wired load controllers (sold separately, refer to Load Controllers) via CBL-CAT5E-ZUMLINK-P cables (sold separately, refer to Cables). The ZUMLINK-KP comes preassembled with the white ZUMLINK-BTNR rocker button, which offers on/off switching and dimming adjustment with the ability to save one scene preset. Additional pushbutton configurations are available separately. Refer to Rocker and Button Tree Features on page 38 for details. The pushbutton configurations support the same capabilities as the rocker button but with additional scene presets.

The ZUMLINK-KP mounts to a standard electrical box. Rocker buttons/button trees and bezels are available in almond, black, gray, red, and white. The button trees also have options for blank buttons, standard pad printed labels, or custom engravings. A finished installation requires a decorator-style faceplate (FP-G series, sold separately).

(Faceplate not included)

Presence Detectors

STEINEL™ presence detectors with Zūm® Link wired communication are part of a system designed to provide sophisticated lighting control with simple installation. A wired solution for Zūm commercial lighting systems, the presence detectors communicate via CBL-CAT5E-ZUMLINK-P cable (sold separately, refer to Cables) which allow for in-room device daisy-chaining to other Zūm Link devices (such as the ZUMLINK-KP keypad or Zūm Link load controllers, refer to Load Controllers and Keypad). The presence detectors are equipped with a daylight sensor and mount directly to the ceiling or via a junction box (not included). The RLY presence detectors also have a three-wire output relay to connect to a relay-input capable device, such as an HVAC call system.

Presence Detector with Daylight Sensing

- ZUMLINK-IR-QUATTRO-DLS with passive infrared technology
- ZUMLINK-DT-QUATTRO-DLS with passive infrared and ultrasonic technology
- ZUMLINK-US-QUATTRO-DLS with ultrasonic technology
- ZUMLINK-IR-QUATTRO-HD-DLS with high-definition, passive infrared technology
- ZUMLINK-US-HALLWAY-DLS with ultrasonic technology and bidirectional detection for hallways
- ZUMLINK-US-ONEWAY-DLS with ultrasonic technology and unidirectional detection for hallways

Presence Detector with Daylight Sensing and Output Relay

- ZUMLINK-IR-QUATTRO-DLS-RLY with passive infrared technology
- ZUMLINK-DT-QUATTRO-DLS-RLY with passive infrared and ultrasonic technology
- ZUMLINK-US-QUATTRO-DLS-RLY with ultrasonic technology
- ZUMLINK-IR-QUATTRO-HD-DLS-RLY with high-definition, passive infrared technology
- ZUMLINK-US-HALLWAY-DLS-RLY with ultrasonic technology and bidirectional detection for hallways
- ZUMLINK-US-ONEWAY-DLS-RLY with ultrasonic technology and unidirectional detection for hallways

ZUMLINK-IR-QUATTRO-DLS and ZUMLINK-IR-QUATTRO-DLS-RLY

ZUMLINK-IR-QUATTRO-HD-DLS and ZUMLINK-IR-QUATTRO-HD-DLS-RLY

ZUMLINK-US-HALLWAY-DLS and ZUMLINK-US-HALLWAY-DLS-RLY

ZUMLINK-US-QUATTRO-DLS and ZUMLINK-US-QUATTRO-DLS-RLY

ZUMLINK-DT-QUATTRO-DLS and ZUMLINK-DT-QUATTRO-DLS-RLY

ZUMLINK-US-ONEWAY-DLS and ZUMLINK-US-ONEWAY-DLS-RLY

All Zūm Link Wired Presence Detectors are functionally similar. For simplicity within this guide, the term "presence detectors" is used except where otherwise noted.

Hub

The ZUM-HUB4 enables centralized management for Zūm® commercial lighting systems of up to 1,000 rooms with an Ethernet switch (sold separately) across Zūm wired, Zūm wireless, and external spaces. The device provides a web-based user interface for control. A built-in time clock enables room lighting

and occupancy and vacancy sensing automation. The ZUM-HUB4 can also be integrated with other Crestron lighting systems and control systems.

The ZUM-HUB4 is featured in several preassembled lighting control cabinets.

- ZUML-HUB4-GW: 4-Series® Control Processor for Zūm® Lighting Control System with Wireless Gateway and Power Supply

  Contains:

  - ZUM-HUB4 and PW-2420RU power pack
  - ZUMNET-GATEWAY: Zūm® Net Wireless Gateway for Zūm Light Control System
  - PW-2407WU: Wall Mount Power Pack, 24VDC, 0.75A, 2.1 mm, Universal

    For use with the ZUMNET-GATEWAY
- ZUML-HUB4-PAK: Zūm® Lighting Control Processor Panel, Basic

  Contains:

  - ZUM-HUB4 and PW-2420RU power pack
  - CEN-SW-POE-5: 5-Port PoE Switch
  - GLEX-FT-24-HC: Feed-Through Enclosure, 24 Circuits, Hinged Cover
- ZUML-HUB4-CN-PAK: Zūm® Lighting Control Processor Panel, Expanded
  - ZUM-HUB4 and PW-2420RU power pack
  - DIN-AP4: 4-Series® DIN Rail Control System
  - DIN-EN-6X18: Enclosure for DIN Rail Devices, 6 DIN Rails, 18 M Wide
  - CEN-SW-POE-5 (x2): 5-Port PoE Switch
  - DIN-HUB (x2): DIN Rail Cresnet Distribution Hub
  - DIN-PWS60 (x2): DIN Rail 60 Watt Cresnet® Power Supply

    For use with the DIN-HUB
- ZUML-HUB4-SWPOE-26

  Contains:

  - ZUM-HUB4 and PW-2420RU power pack
  - CEN-SWPOE-26: 26 Port PoE+ Network Switch
  - DIN-EN-3X18: Enclosure for DIN Rail Devices, 3 DIN Rails, 18 M Wide
- ZUML-SWPOE-26

  Contains:

  - CEN-SWPOE-26: 26 Port PoE+ Network Switch
  - DIN-EN-3X18: Enclosure for DIN Rail Devices, 3 DIN Rails, 18 M Wide

ZUM-HUB4

ZUML-HUB4-GW

ZUML-HUB4-PAK

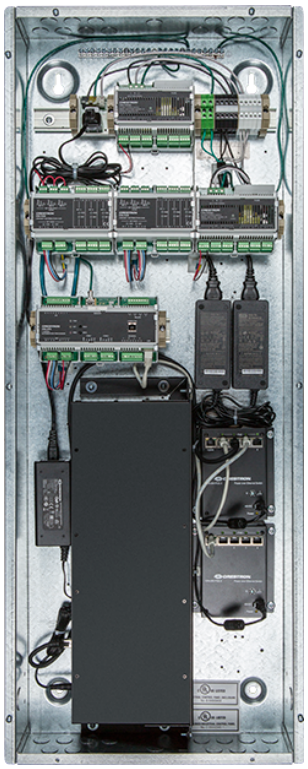

ZUML-HUB4-CN-PAK

ZUML-SWPOE-26

ZUML-HUB4-SWPOE-26

Software

Zūm Wired offers a configuration and a program license for the ZUM-HUB4.

Zūm App

The Crestron Zūm® Lighting Configuration App (CRESTRON-ZUM) enables management of Zūm spaces and devices via a Bluetooth® connection on an Apple® iOS® or Android™ device. Simply pair a mobile device running the app with a ZUMMESH-NETBRIDGE or ZUMLINK-KP to manage Zūm spaces or

individual Zūm device settings. Download the Crestron Zūm app from the Google Play™ or Apple App Store® online store.

Custom Program License for the ZUM-HUB4

The SW-HUB4-PROG is a software license that activates the custom program slot on the ZUM-HUB4 control system.

The custom program slot allows a ZUM-HUB4 control system to run a custom program in parallel with the centralized management native to the ZUM-HUB4. Create and update programs that provide custom functionality without affecting the centralized management of the ZUM-HUB4.

To obtain an SW-HUB4-PROG license, complete the Request for SW-HUB4-PROG License form.

For support, contact license@crestron.com.

Accessories

Zūm Wired accessories include a power supply, cables, custom programming for the ZUM-HUB4, and button trees for keypads.

Zūm Link Power Supply

The Zūm® Wired ZUMLINK-JBOX-PSU power supply delivers additional Zūm Link power for in-room lighting control. Equipped with four Zūm Link connections, it provides power distribution and simple wiring using CBL-CAT5E-ZUMLINK-P cables (sold separately, refer toCables on page 17) to other Zūm Link devices.

Cables

Zūm Wired cables terminate with RJ-45 connectors for easy wiring. The cables area available in various lengths for both Zūm Link and Zūm Net applications.

Zūm Net Wiring

The CBL-CAT5E-ZUMNET-P CAT5e cable provides a reliable Ethernet connection for Zūm Net devices within a Zūm® Wired commercial lighting system. The CBL-CAT5E-ZUMNET-P wiring is housed in a plenum-rated jacket, and is available in four lengths from 25 ft (8 m) to 500 ft (152 m) to provide maximum flexibility for LAN wiring.

- CBL-CAT5E-ZUMNET-P-25
- CBL-CAT5E-ZUMNET-P-50
- CBL-CAT5E-ZUMNET-P-100

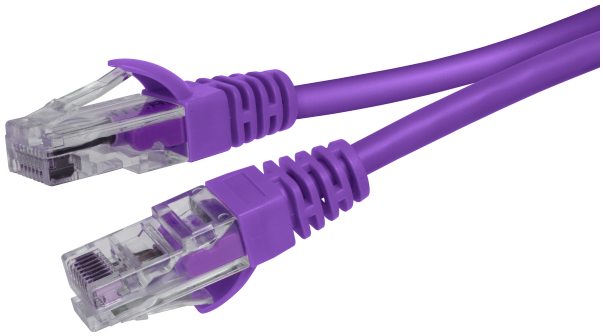

Zūm Link Wiring

The CBL-CAT5E-ZUMLINK-P CAT5e cable provides power and data connections for Zūm Link devices within a Zūm® Wired commercial lighting system. The CBL-CAT5E-ZUMLINK-P wiring is housed in a plenum-rated jacket, and is available in seven lengths from 6 in. (152 mm) to 500 ft (152 m) to provide maximum flexibility for LAN wiring. The 12 ft (4 m) and 25 ft (8 m) cables are also offered in 10 packs.

- CBL-CAT5E-ZUMLINK-P-0.5
- CBL-CAT5E-ZUMLINK-P-3
- CBL-CAT5E-ZUMLINK-P-6
- CBL-CAT5E-ZUMLINK-P-12
- CBL-CAT5E-ZUMLINK-P-25
- CBL-CAT5E-ZUMLINK-P-50
- CBL-CAT5E-ZUMLINK-P-12-10PK
- CBL-CAT5E-ZUMLINK-P-25-10PK

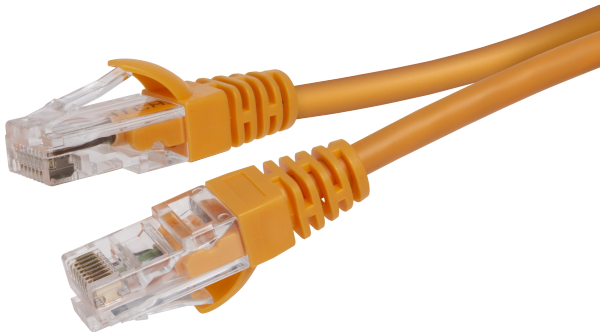

Adapter Cable

The Zūm® Wired ZUMLINK-CONV-CN adapter cable allows Zūm wired devices with Zūm Link communication to integrate via Cresnet® for legacy controls. The plenum-rated adapter converts a single female RJ-45 Zūm Link port connection to use on the Cresnet network. Cresnet screw terminals provide a contact closure input with the ability to trigger Zūm devices into Emergency Override mode. For flexible in-room wiring, daisy chain Zūm Link with the ZUMLINK-SPLTR-RJ45 RJ-45 splitter to avoid dead ends.

RJ-45 Splitter

The Zūm® Wired ZUMLINK-SPLTR-RJ45 RJ-45 splitter enables one CBL-CAT5E-ZUMLINK-P cable to output two Zūm Link ports. It is plenum rated and works with Zūm Link devices. For flexible, in-room wiring, use with the ZUMLINK-CONV-CN to daisy chain Zūm Link devices with Cresnet® devices.

Rocker Button and Button Trees

The ZUMLINK-BTN bezel with rocker button or button tree allows for easy customization of a ZUMLINK-KP Zūm® Wired Keypad (sold separately, refer to Keypad) and is available in almond, black, red, gray, or white. The ZUMLINK-KP comes installed with a white ZUMLINK-BTNR ENGRAVED rocker button, but may be replaced with any of the other ZUMLINK-BTN button trees.

ZUMLINK-BTNR **ZUMLINK-BTN2** **ZUMLINK-BTN4** **ZUMLINK-BTN6** **ZUMLINK-BTN8**

The following sections include:

- Features on page 20
- Application Scenarios on page 40

Features

Refer to the following sections for more information on the features provided by various Zūm Wired devices.

- Load Controller Features
- Keypad Features
- Presence Detector Features
- Hub Features
- Software Features
- Power Supply Features
- Cable Features
- Cable Accessory Features
- Rocker and Button Tree Features

Load Controller Features

Zūm Wired load controllers include:

- ZUMNET-JBOX-16A-LV on page 21
- ZUMNET-JBOX-DALI on page 22
- ZUMLINK-JBOX-16A-LV on page 23
- ZUMLINK-JBOX-20A-PLUG on page 24
- ZUMLINK-JBOX-20A-SW on page 25
- ZUMLINK-EXP-16A-DIMU on page 27

ZUMNET-JBOX-16A-LV

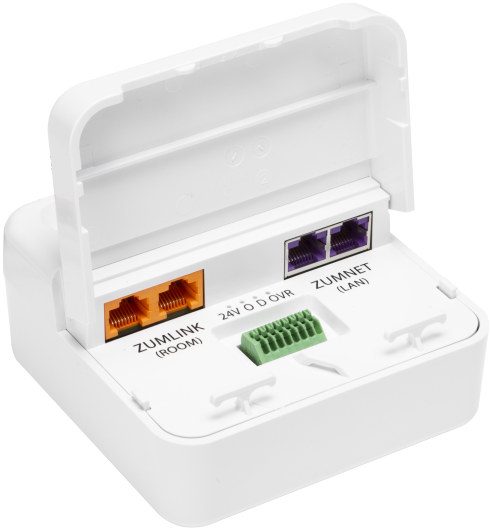

- Zūm® wired junction box mounted lighting load dimmer
- Dimming control of 0-10V LED drivers or 4-wire fluorescent ballasts
- Integration with Zūm keypads, presence detectors, and daylight sensors (sold separately)
- Ethernet network connection to ZUM-HUB4 control system (sold separately)
- Integrated contact closure input

ZūmNet Wired Technology

In a Zūm network, Zūm Net load controllers facilitate communications between rooms via Ethernet and can be daisy-chained for network expansion. Each device in the chain communicates to a Zūm Hub control system for centralized monitoring, management, and reporting. Zūm Link devices connect to Zūm Net devices to provide in-room lighting control. Zūm Link devices work together in a local ecosystem to provide customized solutions.

Zūm Link Wired Technology

Zūm Link technology enables in-room lighting control through keypads and sensors wired to controllers. Zūm Wired devices connect via CBL-CAT5E-ZUMLINK-P CAT5e cable (sold separately) to RJ-45 ports to

provide simple daisy-chaining and lighting control of compatible loads. The Zūm Wired devices work together in a local ecosystem to provide customized solutions using the Zūm app.

Energy Efficiency

The load controllers are capable of energy monitoring through custom programming. Occupancy sensor, vacancy sensor, and daylight sensor connectivity enables significant energy savings. To reduce energy usage, lights turn off automatically when the room is vacant and dim gradually depending on the amount of natural daylight in the room.

Easy Installation

For flexibility and ease-of-use, install Zūm devices (load controllers, keypads, and presence detectors, refer to Overview) and connect them with Zūm Link (CBL-CAT5E-ZUMLINK-P) or Zūm Net (CBL-CAT5E-ZUMNET-P) CAT5e cable (refer to Cables). Nonsystem presence detectors may also be installed to any load controller with analog inputs. Room setup can be accomplished quickly through the Zūm app. A finished installation requires a decorator-style faceplate (FP-G Series, sold separately).

Override Contact Closure Input

An integrated contact closure provides the means to place all connected Zūm Net and Zūm Link devices into Emergency Override mode.

ZUMNET-JBOX-DALI

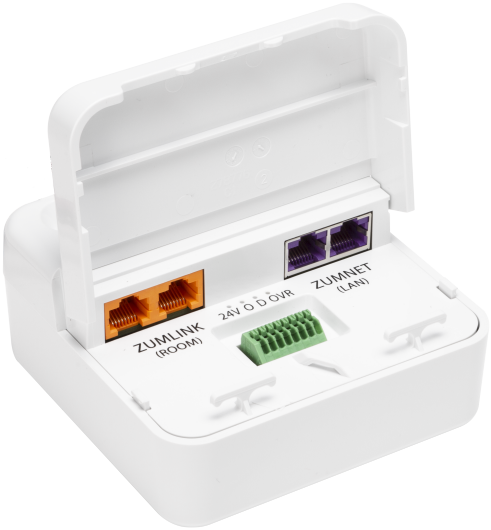

- Zūm® wired junction box mounted DALI® drivers lighting controller
- Control of DALI compliant dimmable LED or fluorescent loads
- Integration with Zūm keypads, presence detectors, and daylight sensors (sold separately)
- Ethernet network connection to ZUM-HUB4 control system (sold separately)
- Integrated contact closure input

Zūm Net Wired Technology

In a Zūm network, Zūm Net load controllers facilitate communications between rooms via Ethernet and can be daisy-chained for network expansion. Each device in the chain communicates to a Zūm Hub

control system for centralized monitoring, management, and reporting. Zūm Link devices connect to Zūm Net devices to provide in-room lighting control. Zūm Link devices work together in a local ecosystem to provide customized solutions.

Zūm Link Wired Technology

Zūm Link technology enables in-room lighting control through keypads and sensors wired to controllers. Zūm Wired devices connect via CBL-CAT5E-ZUMLINK-P CAT5e cable (sold separately) to RJ-45 ports to provide simple daisy-chaining and lighting control of compatible loads. The Zūm Wired devices work together in a local ecosystem to provide customized solutions using the Zūm app.

Energy Efficiency

The load controllers are capable of energy monitoring through custom programming. Occupancy sensor, vacancy sensor, and daylight sensor connectivity enables significant energy savings. To reduce energy usage, lights turn off automatically when the room is vacant and dim gradually depending on the amount of natural daylight in the room.

Easy Installation

For flexibility and ease-of-use, install Zūm devices (load controllers, keypads, and presence detectors, refer to Overview) and connect them with Zūm Link (CBL-CAT5E-ZUMLINK-P) or Zūm Net (CBL-CAT5E-ZUMNET-P) CAT5e cable (refer to Cables). Nonsystem presence detectors may also be installed to any load controller with analog inputs. Room setup can be accomplished quickly through the Zūm app. A finished installation requires a decorator-style faceplate (FP-G Series, sold separately).

Override Contact Closure Input

An integrated contact closure provides the means to place all connected Zūm Net and Zūm Link devices into Emergency Override mode.

ZUMLINK-JBOX-16A-LV

- Zūm® wired junction box mounted lighting load dimmer
- Dimming control of 0-10V LED drivers or 4-wire fluorescent ballasts
- Integration with Zūm keypads, presence detectors, and daylight sensors (sold separately)

- Supports in-room device daisy chaining
- Integrated contact closure input

Zūm Link Wired Technology

Zūm Link technology enables in-room lighting control through keypads and sensors wired to controllers. Zūm Wired devices connect via CBL-CAT5E-ZUMLINK-P CAT5e cable (sold separately) to RJ-45 ports to provide simple daisy-chaining and lighting control of compatible loads. The Zūm Wired devices work together in a local ecosystem to provide customized solutions using the Zūm app.

Energy Management and Efficiency

The load controllers are capable of energy monitoring through custom programming. Occupancy sensor, vacancy sensor, and daylight sensor connectivity enables significant energy savings. To reduce energy usage, lights turn off automatically when the room is vacant and dim gradually depending on the amount of natural daylight in the room.

Easy Installation

For flexibility and ease-of-use, install Zūm devices (load controllers, keypads, and presence detectors, refer to Overview) and connect them with Zūm Link (CBL-CAT5E-ZUMLINK-P) or Zūm Net (CBL-CAT5E-ZUMNET-P) CAT5e cable (refer to Cables). Nonsystem presence detectors may also be installed to any load controller with analog inputs. Room setup can be accomplished quickly through the Zūm app. A finished installation requires a decorator-style faceplate (FP-G Series, sold separately).

Override Contact Closure Input

An integrated contact closure provides the means to place all connected Zūm Net and Zūm Link devices into Emergency Override mode.

ZUMLINK-JBOX-20A-PLUG

- Zūm® wired junction box mounted lighting load plug load controller
- Integration with Zūm keypads, presence detectors, and daylight sensors (sold separately)
- Zero-cross switching with the ability to switch control of 20A plug loads

- Supports in-room device daisy chaining
- Integrated contact closure input

Zūm Link Wired Technology

Zūm Link technology enables in-room lighting control through keypads and sensors wired to controllers. Zūm Wired devices connect via CBL-CAT5E-ZUMLINK-P CAT5e cable (sold separately) to RJ-45 ports to provide simple daisy-chaining and lighting control of compatible loads. The Zūm Wired devices work together in a local ecosystem to provide customized solutions using the Zūm app.

Energy Management and Efficiency

The load controllers are capable of energy monitoring through custom programming. Occupancy sensor, vacancy sensor, and daylight sensor connectivity enables significant energy savings. To reduce energy usage, lights turn off automatically when the room is vacant and dim gradually depending on the amount of natural daylight in the room.

Easy Installation

For flexibility and ease-of-use, install Zūm devices (load controllers, keypads, and presence detectors, refer to Overview) and connect them with Zūm Link (CBL-CAT5E-ZUMLINK-P) or Zūm Net (CBL-CAT5E-ZUMNET-P) CAT5e cable (refer to Cables). Nonsystem presence detectors may also be installed to any load controller with analog inputs. Room setup can be accomplished quickly through the Zūm app. A finished installation requires a decorator-style faceplate (FP-G Series, sold separately).

Override Contact Closure Input

An integrated contact closure provides the means to place all connected Zūm Net and Zūm Link devices into Emergency Override mode.

ZUMLINK-JBOX-20A-SW

- Zūm® wired junction box mounted lighting load switch
- Switching control of LED, fluorescent ballast, incandescent, magnetic low-voltage, electronic low-voltage, neon/cold cathode, and high-intensity discharge

- Integration with Zūm keypads, presence detectors, and daylight sensors (sold separately)
- Zero-cross switch control of 20A, 100-277V high inrush lighting loads
- Supports in-room device daisy chaining
- Integrated contact closure input

Zūm Link Wired Technology

Zūm Link technology enables in-room lighting control through keypads and sensors wired to controllers. Zūm Wired devices connect via CBL-CAT5E-ZUMLINK-P CAT5e cable (sold separately) to RJ-45 ports to provide simple daisy-chaining and lighting control of compatible loads. The Zūm Wired devices work together in a local ecosystem to provide customized solutions using the Zūm app.

Energy Management and Efficiency

The load controllers are capable of energy monitoring through custom programming. Occupancy sensor, vacancy sensor, and daylight sensor connectivity enables significant energy savings. To reduce energy usage, lights turn off automatically when the room is vacant and dim gradually depending on the amount of natural daylight in the room.

Easy Installation

For flexibility and ease-of-use, install Zūm devices (load controllers, keypads, and presence detectors, refer to Overview) and connect them with Zūm Link (CBL-CAT5E-ZUMLINK-P) or Zūm Net (CBL-CAT5E-ZUMNET-P) CAT5e cable (refer to Cables). Nonsystem presence detectors may also be installed to any load controller with analog inputs. Room setup can be accomplished quickly through the Zūm app. A finished installation requires a decorator-style faceplate (FP-G Series, sold separately).

Override Contact Closure Input

An integrated contact closure provides the means to place all connected Zūm Net and Zūm Link devices into Emergency Override mode.

ZUMLINK-EXP-16A-DIMU

Auto-Detecting Universal Dimming

Under normal operation, the Crestron Zūm® Lighting Control detects the connected load type and automatically selects the appropriate operating mode. Reverse phase (trailing edge) mode supports incandescent and electronic low-voltage load types, while forward phase (leading edge) mode supports LED, magnetic low-voltage, neon/cold-cathode, and 2-wire fluorescent load types. Center phase mode is also available, combining reverse and forward phase load control to address special cases. The operative mode is indicated by two LEDs located on the front panel.

Zūm Link Wired Technology

Zūm Link technology enables in-room lighting control through keypads and sensors wired to controllers. Zūm Wired devices connect via CBL-CAT5E-ZUMLINK-P CAT5e cable (sold separately) to RJ-45 ports to provide simple daisy-chaining and lighting control of compatible loads. The Zūm Wired devices work together in a local ecosystem to provide customized solutions using the Zūm app.

Energy Efficiency

The load controllers are capable of energy monitoring through custom programming. Occupancy sensor, vacancy sensor, and daylight sensor connectivity enables significant energy savings. To reduce energy usage, lights turn off automatically when the room is vacant and dim gradually depending on the amount of natural daylight in the room.

Plenum Rated NEMA Enclosure

The Crestron Zūm® Lighting Control is designed to be mounted to a vertical surface and meets the requirements of UL® 2043 for installation in an environmental air-handling space (plenum) above a suspended ceiling. Conduit knockouts are provided on the bottom and lower sides of the unit. All connections are made via screw terminals behind the front cover.

Keypad Features

Product features for the ZUMLINK-KP are provided below.

(Faceplate not included)

- Provides control of one or more Zūm® wired J-Box Load Controllers
- RS485 communications for increased reliability
- Preprogrammed rocker button
- Configurable with two, four, six, or eight engraved or pad printed button trees (ZUMLINK-BTN2, ZUMLINK-BTN4, ZUMLINK-BTN6, ZUMLINK-BTN8, not included)
- Powered by 24V Zūm Link bus
- Two RJ-45 connections for device daisy-chaining
- Standard 3.5 in. (89 mm) deep electrical box installation
- Button tree and bezel available in almond, black, gray, red, and white finish
- Matching decorator-style faceplate required (FP-G Series, not included)

Zūm Link Wired Technology

Zūm Link technology enables in-room lighting control through keypads and sensors wired to controllers. Zūm Wired devices connect via CBL-CAT5E-ZUMLINK-P CAT5e cable (sold separately) to RJ-45 ports to provide simple daisy-chaining and lighting control of compatible loads. The Zūm Wired devices work together in a local ecosystem to provide customized solutions using the Zūm app.

Button Configurations

The keypad is equipped with a single, white rocker button for switching or dimming control and is configurable with four, six, or eight pad printed or engravable button trees (sold separately). Replacement configurations are available in an almond, black, gray, red or white finish.

Easy Installation

For flexibility and ease-of-use, install Zūm devices (load controllers, keypads, and presence detectors, refer to Overview) and connect them with Zūm Link (CBL-CAT5E-ZUMLINK-P) or Zūm Net (CBL-CAT5E-ZUMNET-P) CAT5e cable (refer to Cables). Nonsystem presence detectors may also be installed to any load controller with analog inputs. Room setup can be accomplished quickly through the Zūm app. A finished installation requires a decorator-style faceplate (FP-G Series, sold separately).

Presence Detector Features

Product features for the Zūm Link Presence Detectors are provided below.

ZUMLINK-IR-QUATTRO-DLS and ZUMLINK-IR-QUATTRO-DLS-RLY

ZUMLINK-IR-QUATTRO-HD-DLS and ZUMLINK-IR-QUATTRO-HD-DLS-RLY

ZUMLINK-US-HALLWAY-DLS and ZUMLINK-US-HALLWAY-DLS-RLY

ZUMLINK-US-QUATTRO-DLS and ZUMLINK-US-QUATTRO-DLS-RLY

ZUMLINK-DT-QUATTRO-DLS and ZUMLINK-DT-QUATTRO-DLS-RLY

ZUMLINK-US-ONEWAY-DLS and ZUMLINK-US-ONEWAY-DLS-RLY

- Ceiling-mount presence sensor
- 360 degree coverage pattern
- Fully digital circuitry for low cost and high reliability
- Built-in closed loop daylight sensor
- Control system communications the Zūm® Link network
- Compatible with Zūm wired keypad
- For the -RLY model, additional relays included for input-relay capable devices

Zūm Link Wired Technology

Zūm Link technology enables in-room lighting control through keypads and sensors wired to controllers. Zūm Wired devices connect via CBL-CAT5E-ZUMLINK-P CAT5e cable (sold separately) to RJ-45 ports to provide simple daisy-chaining and lighting control of compatible loads. The Zūm Wired devices work together in a local ecosystem to provide customized solutions using the Zūm app.

Easy Installation

For flexibility and ease-of-use, install Zūm devices (load controllers, keypads, and presence detectors, refer to Overview) and connect them with Zūm Link (CBL-CAT5E-ZUMLINK-P) or Zūm Net (CBL-CAT5E-ZUMNET-P) CAT5e cable (refer to Cables). Nonsystem presence detectors may also be installed to any load controller with analog inputs. Room setup can be accomplished quickly through the Zūm app.

Easy Commissioning

Finish the installation by quickly commissioning the room through the Zūm app. Expedite commissioning by copying a room configuration and sending it to an identical room. Save a room configuration

template and share it via the ZUM-HUB4 or the Zūm app. The ZUMLINK-KP Bluetooth® connection is required to configure a Zūm wired space with the Zūm app.

Hub Features

Features for the ZUM-HUB4 are provided below.

- Centralized management for Zūm® commercial lighting systems
- Provides web-based user interface for easy configuration, control, scheduling, and monitoring
- Time clock for room lighting automation and sensing behavior
- Daisy-chain up to 20 Zūm Net load controllers (sold separately) via their built-in Zūm Net ports for room-to-room communication
- Use with an Ethernet switch (sold separately) to support multiple Zūm Net daisy-chains up to 1,000 rooms
- Daisy-chain up to 32 Zūm Link devices (sold separately) via their built-in Zūm Link ports for in-room communication
- BACnet™ communication supports control for up to 9,000 BACnet objects
- Dedicated Control Subnet
- Gigabit Ethernet networking
- Enterprise-grade security
- Enables integration with other Crestron lighting systems, control systems, touch screens, shading, HVAC, and more
- Single-space rack-mountable
- Universal 100–240V external power supply

Zūm Net Wired Technology

Zūm Net wired technology offers room-to-room communication. Control a room with one Zūm Net device (ZUMNET-JBOX-DALI, ZUMNET-JBOX-16A-LV, sold separately), and daisy-chain up to 20 Zūm Net devices with CBL-CAT5E-ZUMNET-P cable. For centralized management of a Zūm Wired System, connect the chain directly to a ZUM-HUB4 or multiple chains to an Ethernet switch (sold separately) to support up to 1,000 rooms.

Web-Based Management

The web browser user interface can manage, monitor, and schedule all of the available rooms on the network. Use a laptop computer (not included) to configure devices to work with the ZUM-HUB4. Active lighting scenes, daylight levels, occupancy detection, and scheduled time clock events are displayed. Errors are shown to facilitate troubleshooting.

Time Clock

A built-in time clock enables automated lighting control based on the time of day. Assign a Room Category (such as Office or Hallway) for consistent control and programming across multiple rooms. The clock allows Day Pattern arrangement for each Room Category, with up to 24 Room States

scheduled over a 24 hour period. Different Day Patterns can be defined and assigned to the calendar, which is pre-populated with typical day patterns and a selection of U.S. holidays.

BACnet™ Communications Protocol

Communicate with a Building Management System (BMS) to provide control of fire/life safety, lighting, and other building automation systems. The ZUM-HUB4 supports up to 1,9809,000 BACnet objects.

Crestron XiO Cloud® Service Integration

Use Crestron XiO Cloud functionality for remote commissioning and monitoring of a ZUM-HUB4 control system.

Zūm Wireless Integration

Integration with existing Zūm Wireless installations is achieved with a ZUMNET-GATEWAY (not supplied), which connects to the ZUM-HUB4 via Ethernet.

Zūm System Integration with Other Crestron Control Systems

In addition to managing rooms equipped with Zūm lighting control, the ZUM-HUB4 enables integration with other Crestron systems over an Ethernet connection. Two methods of integration are available:

- **External Rooms**: A virtual room using legacy or conventional Crestron lighting control can be added to the Zūm network to be monitored, controlled and scheduled.[1,2]
- **Mirrored Rooms**: An external Crestron system controls and monitors a room equipped with a Zūm system. Mirrored rooms allow for room control with a Crestron touch screen or handheld remote, as well as integration with shading, climate control, AV, and other equipment.[1,2]

1. SIMPL+® software modules are provided for use in commissioning a Crestron control system to work with the ZUM-HUB4. The software modules run within the control system program and provide virtual connections for all the necessary intersystem control signals. A separate dedicated module is required for each external and mirrored room. Control systems are limited in the number of modules supported, ranging from 0 to 2001000 depending on the model. For further assistance, please contact Crestron Commercial Lighting Support via email at clclighting@crestron.com or by calling 855-644-7643.
2. Other Crestron control systems must be commissioned to provide the control logic required to communicate and operate as part of the Zūm network. Once integrated, each external room effectively becomes a part of the Zūm ecosystem.

Software Features

Refer to the following sections for Zūm app and ZUM-HUB4 custom program license software features.

Zūm App

Features for the Zūm app are provided below.

- Mobile configuration tool for Zūm® wired and wireless commercial lighting systems
- Compatible with iOS® and Android™ operating systems
- Bluetooth® low energy (BLE) communications

Zūm Space Management

Zūm spaces are manageable via the Zūm lighting configuration app. Open the Crestron Zūm app and all nearby Zūm spaces appear. Connect to a Zūm space and easily control and manage the space's name, security settings, and network configuration.

Zūm Device Management

Settings for individual load controllers, sensors, and keypads are modifiable from the Zūm lighting configuration app. Dimming levels, sensor sensitivity, and lighting scenes are all configurable through an intuitive onscreen procedure.

Bluetooth Connectivity

The Zūm lighting configuration app uses Bluetooth to easily pair with a ZUMMESH-NETBRIDGE for wireless installations or ZUMLINK-KP for wired installations. The signal strength between a mobile device and a Zūm device is displayed on the app's home screen for user convenience.

ZUM-HUB4 Custom Program License

- Activates a custom program slot on the ZUM-HUB4
- Run custom programming alongside native ZUM-HUB4 functionality
- Maintain centralized management of the system

Power Supply Features

Product features for the ZUMLINK-JBOX-PSU are provided below.

- Zūm® wired junction box mounted power supply
- Powers Zūm keypads, presence detectors, and daylight sensors (sold separately)

Easy Installation

For flexibility and ease-of-use, install Zūm devices (load controllers, keypads, and presence detectors, refer to Overview) and connect them with Zūm Link (CBL-CAT5E-ZUMLINK-P) or Zūm Net (CBL-CAT5E-ZUMNET-P) CAT5e cable (refer to Cables). Nonsystem presence detectors may also be installed to any load controller with analog inputs. Room setup can be accomplished quickly through the Zūm app.

Cable Features

Cables are available for Zūm Net and Zūm Link applications.

- CBL-CAT5E-ZUMNET-P Zūm Link Wiring on page 36
- CBL-CAT5E-ZUMLINK-P Zūm Link Wiring on page 36

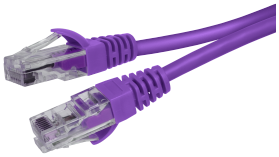

CBL-CAT5E-ZUMNET-P CBL-CAT5E-ZUMLINK-P

CBL-CAT5E-ZUMNET-P Zūm Link Wiring

- Preterminated CAT5e cable for Zūm Net device communications between rooms in a Zūm® Wired system
- RS485 Communications
- Plenum-rated jacket
- RJ-45 connectors with dust cap
- Available in four lengths

CBL-CAT5E-ZUMNET-P cables connect a Zūm Net device to a ZUM-HUB4 control system (refer to Hub), an Ethernet switch, or to other Zūm Net devices. This enables LAN communications and device daisy-chaining between rooms within a Zūm Wired system.

CBL-CAT5E-ZUMLINK-P Zūm Link Wiring

- Preterminated CAT5e cable for Zūm Link device communications within a Zūm® Wired space
- RS485 Communications
- Plenum-rated jacket
- RJ-45 connectors
- Available in seven lengths

CBL-CAT5E-ZUMLINK-P cables distribute power between Zūm Link devices for in-room device daisy chaining. They provide communications between load controllers, keypads, sensors, and any other devices within a Zūm Wired room as well as transport emergency override capabilities. CBL-CAT5E-ZUMLINK-P cables also distribute power and data between Zūm Net and Zūm Link devices to facilitate network expansion.

Cable Accessory Features

Cables accessories include the ZUMLINK-CONV-CN adapter cable and the ZUMLINK-SPLTR-RJ45 splitter.

- ZUMLINK-CONV-CN on page 37
- ZUMLINK-SPLTR-RJ45 on page 37

ZUMLINK-CONV-CN ZUMLINK-SPLTR-RJ45

ZUMLINK-CONV-CN

- Connects Cresnet devices to the Zūm Link network via a CBL-CAT5E-ZUMLINK-P cable.
- Provides an RJ-45 female port and Cresnet network screw terminals
- Daisy chain Zūm Link devices with the ZUMLINK-SPLTR-RJ45 to avoid dead ends
- Plenum-rated cable

Zūm Link Wired Technology

Zūm Link technology enables in-room lighting control through keypads and sensors wired to controllers. Zūm Wired devices connect via CBL-CAT5E-ZUMLINK-P CAT5e cable (sold separately) to RJ-45 ports to provide simple daisy-chaining and lighting control of compatible loads. The Zūm Wired devices work together in a local ecosystem to provide customized solutions using the Zūm app.

Cresnet Wired Network

The Zūm devices use the dependable Cresnet wired network for communication between devices. The Cresnet bus offers easy wiring and configuration, carrying bidirectional communication and 24VDC power to each device over a simple 4-conductor cable.

ZUMLINK-SPLTR-RJ45

The Zūm® Wired ZUMLINK-SPLTR-RJ45 RJ-45 splitter enables one CBL-CAT5E-ZUMLINK-P cable to output two Zūm Link ports. It is plenum rated and works with Zūm Link devices. For flexible, in-room wiring, use with the ZUMLINK-CONV-CN to daisy chain Zūm Link devices with Cresnet® devices.

Rocker and Button Tree Features

Product features for the rocker and button tree configurations are provided below.

ZUMLINK-BTNR **ZUMLINK-BTN2** **ZUMLINK-BTN4** **ZUMLINK-BTN6** **ZUMLINK-BTN8**

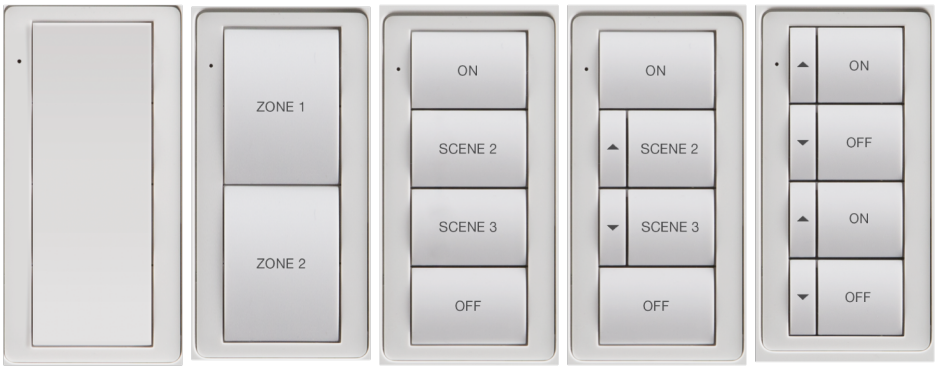

- Provides multiple button configurations for ZUMLINK-KP keypads
- Two-piece installation: button tree or rocker with matching bezel
- Easily swap button configurations in the field
- Available as a rocker button or in configurations of two, four, six, or eight button trees
- Pad printed labeling or custom engravings available
- Offered in black, white, almond, gray, or red finishes

Pad Printing

Pad printed button trees allow for convenient preprinted labeling on any ZUMLINK-BTN configuration. Visit the following product pages to view the various button configurations and colors offered for the pad printed models.

- ZUMLINK-BTN2: ZONE 1, ZONE 2
- ZUMLINK-BTN4: ON, SCENE 2, SCENE 3, OFF
- ZUMLINK-BTN6: ON, SCENE 2, SCENE 3, OFF, ∧, ∨
- ZUMLINK-BTN8: ON, OFF, ON, OFF, ∧, ∨, ∧, ∨

Custom Engraving

Crestron Engraver software makes it easy to specify and order button trees with custom engravings for a ZUMLINK-KP Zūm Wired Keypad. Visit the following product pages to view the various button configurations and colors offered for the custom engraved models.

- ZUMLINK-BTN2 ENGRAVED
- ZUMLINK-BTNR ENGRAVED
- ZUMLINK-BTN4 ENGRAVED
- ZUMLINK-BTN6 ENGRAVED
- ZUMLINK-BTN8 ENGRAVED

Blank Buttons

In addition to custom engraving and pad printed buttons, blank buttons are available. Visit the following product pages to view the various button configurations and colors offered.

- ZUMLINK-BTN2 BLANK
- ZUMLINK-BTNR BLANK
- ZUMLINK-BTN4 BLANK
- ZUMLINK-BTN6 BLANK
- ZUMLINK-BTN8 BLANK

Application Scenarios

Refer to the following illustrations for common applications. For more scenarios, refer to Typical Zūm Wired Applications on page 307.

Zūm Wired System Diagram

Zūm Wired System Diagram

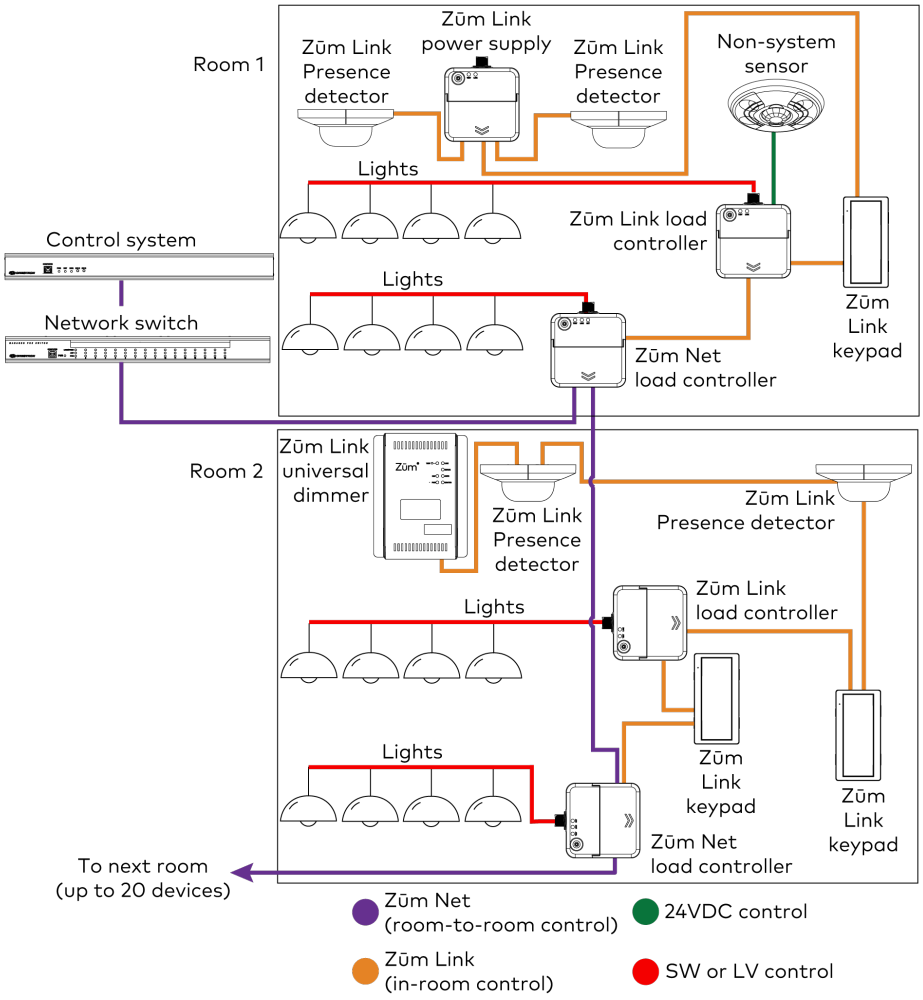

NOTES:

- Daisy-chain up to 20 Zūm Net devices (up to 328 ft (100 m) between Zūm Net devices) with purple CBL-CAT5E-ZUMNET-P RJ-45 cables (sold separately).
- Do not exceed three network switches between a ZUM-HUB4 and a Zūm Net device.
- System sensors communicate digitally via Zūm Link. Non-system sensors communicate via an analog connection on a Zūm Wired load controller.

Integrating a Legacy Lighting System into a Zūm System

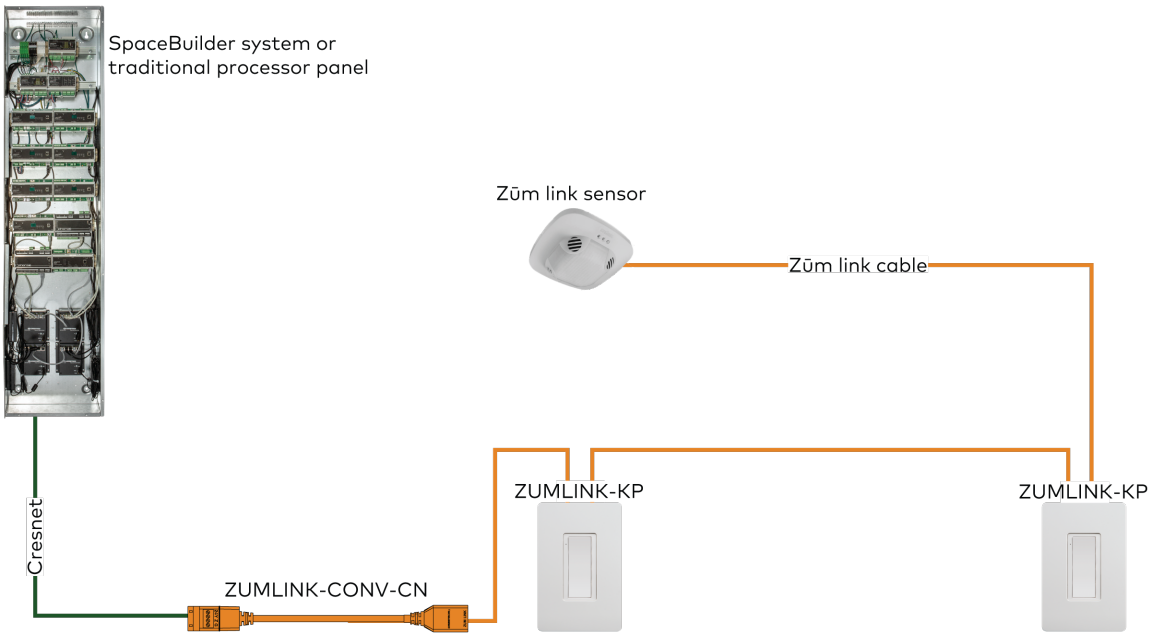

Using a Zūm Link Splitter (ZUMLINK-SPLTR-RJ45)

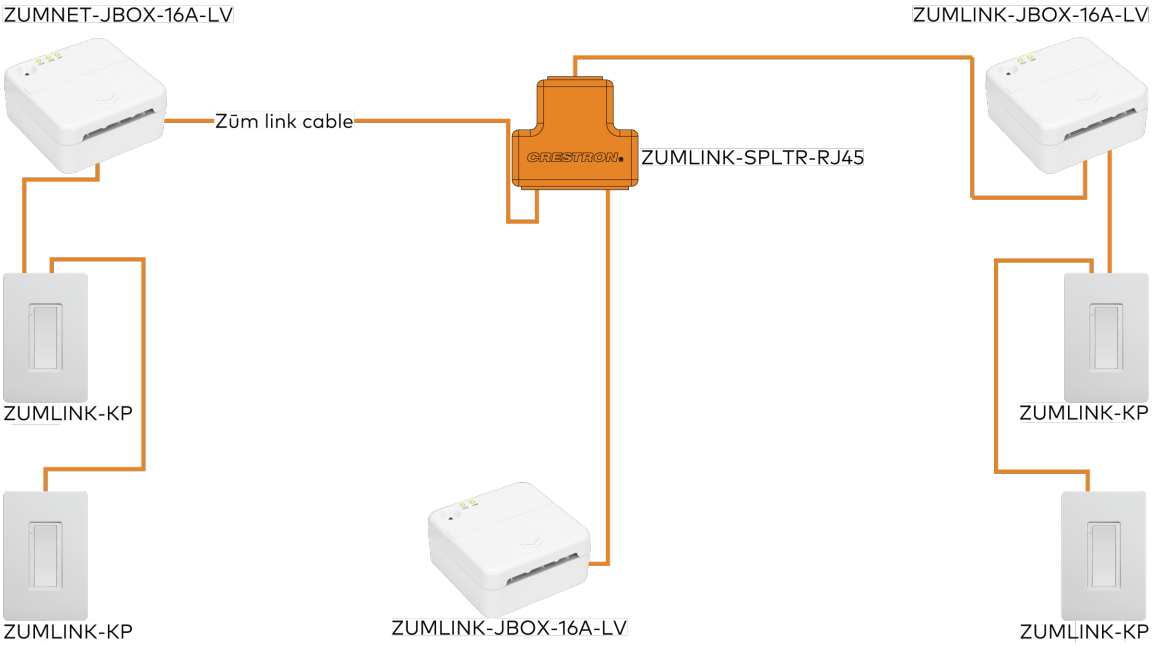

Specifications

Refer to the following sections for more information on the specifications for various Zūm Wired devices.

- Load Controller Specifications
- Keypad Specifications
- Presence Detector Specifications
- Hub Specifications
- Zūm App Specifications
- Power Supply Specifications
- Cable Specifications
- Cable Accessory Specifications
- Rocker and Button Tree Specifications

Load Controller Specifications

Zūm Wired load controllers include:

ZUMNET-JBOX-16A-LV Product Specifications

Load Control

Dim Load Types	0-10V LED drivers or electronic drivers (4-wire)
Dim Control Output	0-10VDC, 60mA maximum sink or source
Line Voltage	100-277VAC, 50/60 Hz
Switch Load Types	LED, electronic drivers, incandescent, magnetic low-voltage, electronic low-voltage,neon/cold cathode, high-intensity discharge, small motor loads
Load Rating	16A 100-277VAC, 50/60 Hz; 0.5 HP @ 120-277VAC
Short Circuit Protection	40A non-replaceable fuse

Wired Communications

ZUMNET (LAN)	(2) RJ-45 ports; Input for control system connection or Zūm Net device; Output for Zūm Net device daisy-chaining
ZUMLINK (ROOM)	(2) RJ-45 ports; In-room Zūm Link device daisy-chaining; 85mA power available for Zūm Link devices, including ZUMLINK-KP keypads; Maximum 750mA pass-through current including any internal power supply
24V, OCC, GND	Occupancy sensor input; 85mA available output current; Spring clamp connector
24V, PHO, GND	Photo sensor input; Spring clamp connector
OVR, GND	Override control input; Spring clamp connector

Controls and Indicators

TEST	(1) Pushbutton and (1) green LED; Push to toggle the switched load output on and off; Press and hold to cycle the dimming level up and down; LED indicates that the load is turned on; LED lights and flashes during room setup and factory reset
ZUMLINK Status	(1) bi-color green/red LED; LED lights green in normal operation; LED lights red when a fault is detected
ZUMNET Status	(1) bi-color green/red LED; LED lights green in normal operation; LED lights red when a fault is detected

Connections

Hot	(1) 14 AWG Class 1 flying lead; Black, line power input
Neutral	(1) 14 AWG Class 1 flying lead; White, neutral
Red	(1) 14 AWG Class 1 flying lead, red, AC output
Purple	(1) 18 AWG Class 1 flying lead, purple, 0-10VDC dimming control output, positive
Pink	(1) 18 AWG Class 1 flying lead, pink, 0-10VDC dimming control output, negative

Environmental

Temperature	32° to 104°F (0° to 40°C)
Humidity	10% to 90% RH (noncondensing)

Construction

Housing	Plastic, white, UL 94 5VA flame rated
Mounting	Mounts to the side of a 4 in. square junction box via a 1/2 in. conduit knockout; Meets the requirements of UL 2043 for installation in an environmental air-handling (plenum) space

Dimensions

Height	4.83 in. (123 mm)
Width	4.25 in. (108 mm)
Depth	2.03 in. (52 mm)

Weight

7 oz (199 g)

Compliance

Regulatory Model: M201933001

cUL916, cUL2043

Intertek® Listed for US & Canada, IC, FCC Part 15 Class A digital device, UL 916, UL 2043, UL 94 5VA

ZUMNET-JBOX-16A-LV Dimension Drawings

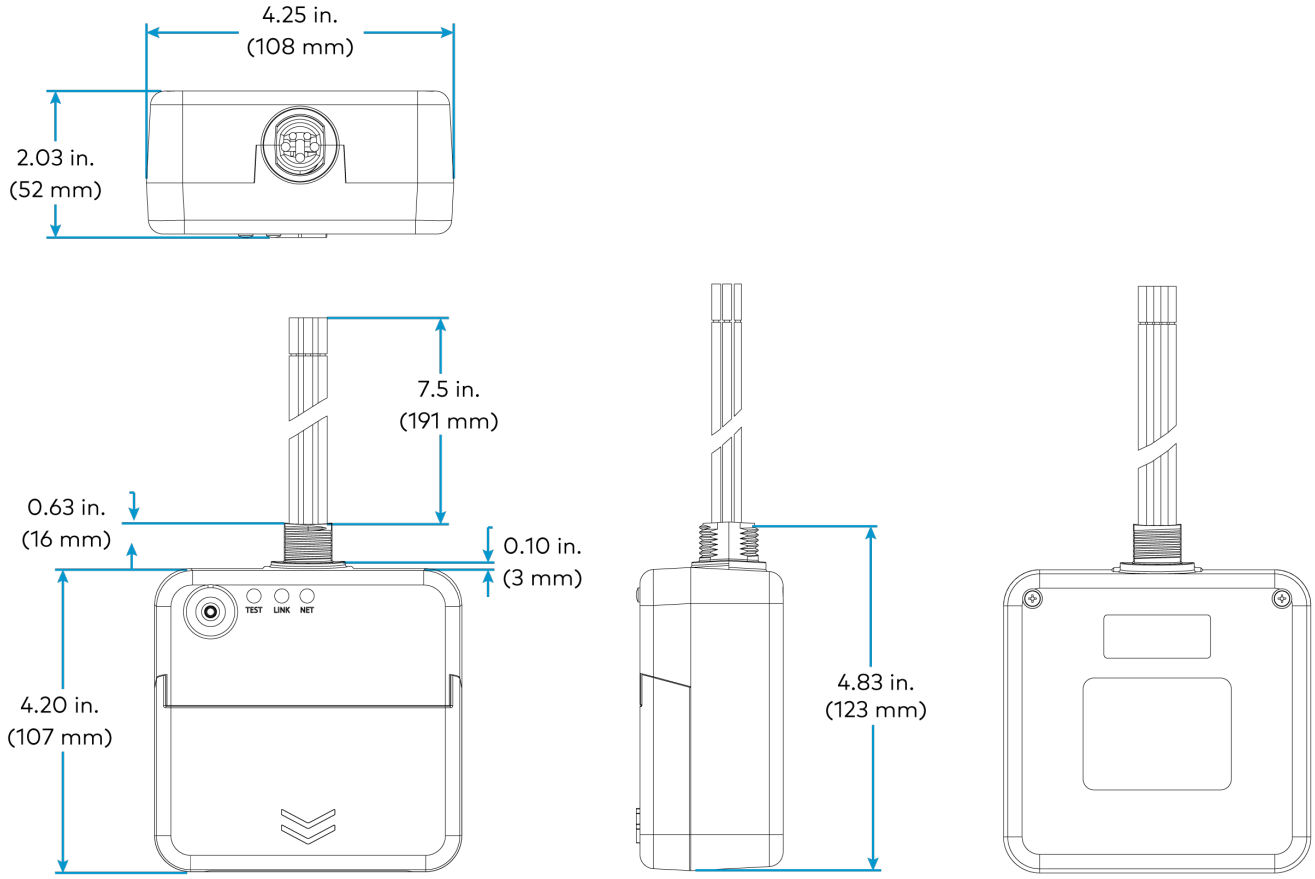

ZUMNET-JBOX-DALI Specifications

Load Control

DALI Load Types	Control of DALI compliant dimmable LED or fluorescent loads
DALI Groups	16
DALI Drivers	64
DALI Bus Power Supply	Maximum: 0.23A; Guaranteed: 0.17A
Line Voltage	100-277VAC, 50/60 Hz

Wired Communications

ZUMNET (LAN)	(2) RJ-45 ports; Input for control system connection or Zūm Net device; Output for Zūm Net device daisy-chaining

ZUMLINK (ROOM)	(2) RJ-45 ports; In-room Zūm Link device daisy-chaining; 85mA power available for Zūm Link devices, including ZUMLINK-KP keypads; Maximum 750mA pass-through current including any internal power supply
24V, OCC, GND	Occupancy sensor input; 85mA available output current; Spring clamp connector
24V, PHO, GND	Photo sensor input; Spring clamp connector
OVR, GND	Override control input; Spring clamp connector

Controls and Indicators

TEST	(1) Pushbutton and (1) green LED; Push to toggle the switched load output on and off; Press and hold to cycle the dimming level up and down; LED indicates that the load is turned on; LED lights and flashes during room setup and factory reset
ZUMLINK Status	(1) bi-color green/red LED; LED lights green in normal operation; LED lights red when a fault is detected
ZUMNET Status	(1) bi-color green/red LED; LED lights green in normal operation; LED lights red when a fault is detected

Connections

Hot	(1) 14 AWG Class 1 flying lead; Black, line power input
Neutral	(1) 14 AWG Class 1 flying lead; White, neutral
Purple	(1) 18 AWG Class 1 flying lead, purple, DALI input/output, low voltage, positive
Gray	(1) 18 AWG Class 1 flying lead, gray, DALI input/output, low voltage, negative
Red	(1) 14 AWG Class 1 flying lead, power monitoring, AC output

Environmental

Temperature	32° to 104°F (0° to 40°C)
Humidity	10% to 90% RH (noncondensing)

Construction

Housing	Plastic, white, UL 94 5VA flame rated
Mounting	Mounts to the side of a 4 in. square junction box via a 1/2 in. conduit knockout; Meets the requirements of UL 2043 for installation in an environmental air-handling (plenum) space

Dimensions

Height	4.83 in. (123 mm)

Width	4.25 in. (108 mm)
Depth	2.03 in. (52 mm)

Weight

7 oz (199 g)

Compliance

Regulatory Model: M201933003

cUL916, cUL2043

Intertek® Listed for US & Canada, IC, FCC Part 15 Class A digital device, UL 916, UL 2043, UL 94 5VA

ZUMNET-JBOX-DALI Dimension Drawings

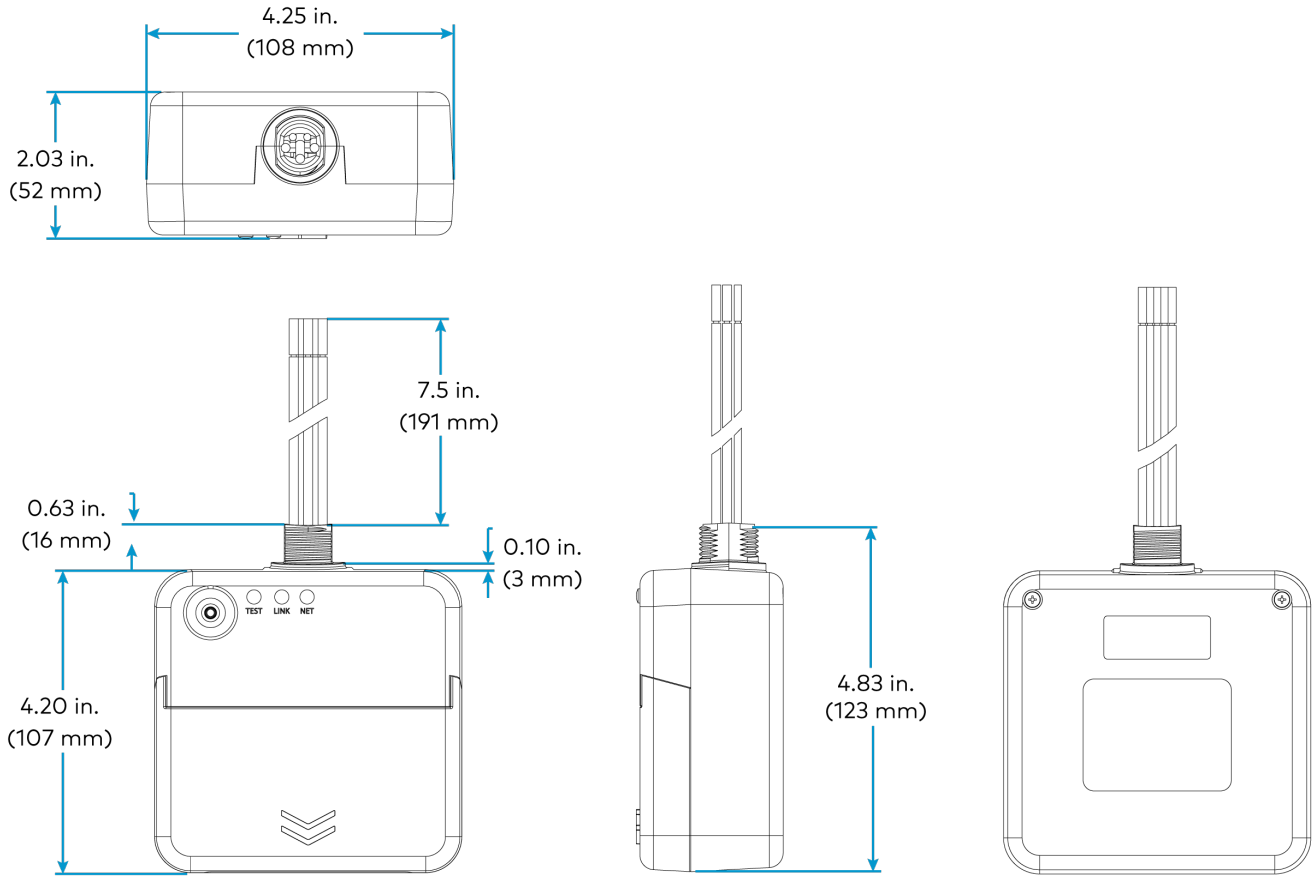

ZUMLINK-JBOX-16A-LV Specifications

Load Control

Dim Load Types	0-10V LED drivers or electronic drivers (4-wire)
Dim Control Output	0-10VDC, 60mA maximum sink or source
Line Voltage	100-277VAC, 50/60 Hz

Switch Load Types	LED, electronic drivers, incandescent, magnetic low-voltage, electronic low-voltage,neon/cold cathode, high-intensity discharge, small motor loads
Load Rating	16A 100-277VAC, 50/60 Hz; 0.5 HP @ 120-277VAC
Short Circuit Protection	40A non-replaceable fuse

Wired Communications

ZUMLINK (ROOM)	(2) RJ-45 ports; In-room Zūm Link device daisy-chaining; 85mA power available for Zūm Link devices, including ZUMLINK-KP keypads; Maximum 750mA pass-through current including any internal power supply
24V, OCC, GND	Occupancy sensor input; 85mA available output current; Spring clamp connector
24V, PHO, GND	Photo sensor input; Spring clamp connector
OVR, GND	Override control input; Spring clamp connector

Controls and Indicators

TEST	(1) Pushbutton and (1) green LED; Push to toggle the switched load output on and off; Press and hold to cycle the dimming level up and down; LED indicates that the load is turned on; LED lights and flashes during room setup and factory reset
ZUMLINK Status	(1) bi-color green/red LED; LED lights green in normal operation; LED lights red when a fault is detected

Connections

Hot	(1) 14 AWG Class 1 flying lead; Black, line power input
Neutral	(1) 14 AWG Class 1 flying lead; White, neutral
Red	(1) 14 AWG Class 1 flying lead, red, AC output
Purple	(1) 18 AWG Class 1 flying lead, purple, 0-10VDC dimming control output, positive
Pink	(1) 18 AWG Class 1 flying lead, pink, 0-10VDC dimming control output, negative

Environmental

Temperature	32° to 104°F (0° to 40°C)
Humidity	10% to 90% RH (noncondensing)

Construction

Housing	Plastic, white, UL 94 5VA flame rated

Mounting	Mounts to the side of a 4 in. square junction box via a 1/2 in. conduit knockout; Meets the requirements of UL 2043 for installation in an environmental air-handling (plenum) space

Dimensions

Height	4.83 in. (123 mm)
Width	4.25 in. (108 mm)
Depth	2.03 in. (52 mm)

Weight

7 oz (199 g)

Compliance

Regulatory Model: M201933001

cUL916, cUL2043

Intertek® Listed for US & Canada, IC, FCC Part 15 Class A digital device, UL 916, UL 2043, UL 94 5VA

ZUMLINK-JBOX-16A-LV Dimension Drawings

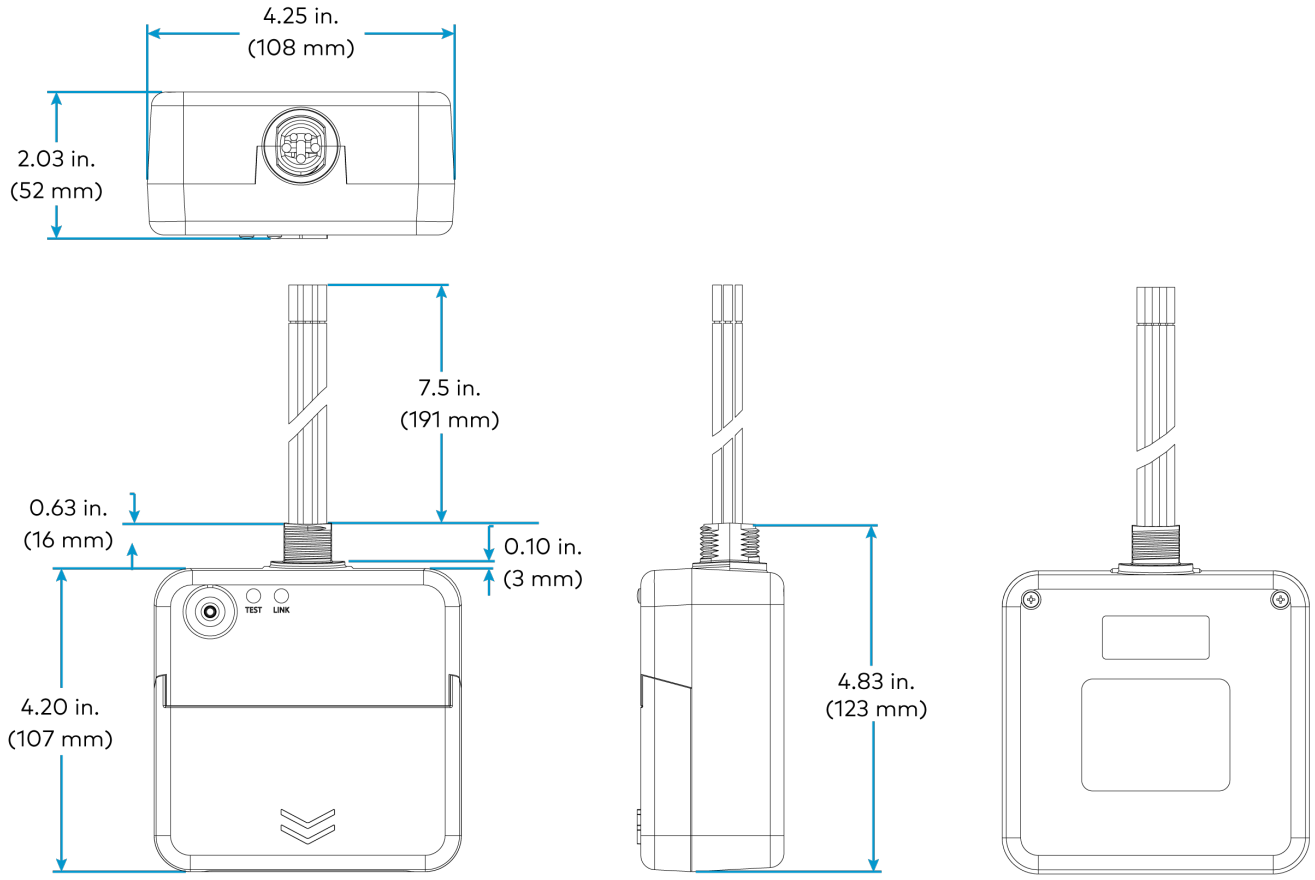

ZUMLINK-JBOX-20A-PLUG Specifications

Load Control

Line Voltage	100-277VAC, 50/60 Hz
Switch Load Types	Controlled receptacles, LED, electronic drivers, incandescent, magnetic low-voltage, electronic low-voltage,neon/cold cathode, high-intensity discharge, small motor loads
Load Rating	20A 100-277VAC, 50/60 Hz high inrush, zero-cross switching; 0.5 HP @ 120-277VAC
Short Circuit Protection	40A non-replaceable fuse

Wired Communications

ZUMLINK (ROOM)	(2) RJ-45 ports; In-room Zūm Link device daisy-chaining; 85mA power available for Zūm Link devices, including ZUMLINK-KP keypads; Maximum 750mA pass-through current including any internal power supply
24V, OCC, GND	Occupancy sensor input; 85mA available output current; Spring clamp connector
24V, PHO, GND	Photo sensor input; Spring clamp connector
OVR, GND	Override control input; Spring clamp connector

Controls and Indicators

TEST	(1) Pushbutton and (1) green LED; Push to toggle the switched load output on and off; Press and hold to cycle the dimming level up and down; LED indicates that the load is turned on; LED lights and flashes during room setup and factory reset
ZUMLINK Status	(1) bi-color green/red LED; LED lights green in normal operation; LED lights red when a fault is detected

Connections

Hot	(1) 14 AWG Class 1 flying lead; Black, line power input
Neutral	(1) 14 AWG Class 1 flying lead; White, neutral
Switched Load	(1) 14 AWG Class 1 flying lead; Red, switched load output

Environmental

Temperature	32° to 104°F (0° to 40°C)
Humidity	10% to 90% RH (noncondensing)

Construction

Housing	Plastic, white, UL 94 5VA flame rated
Mounting	Mounts to the side of a 4 in. square junction box via a 1/2 in. conduit knockout; Meets the requirements of UL 2043 for installation in an environmental air-handling (plenum) space

Dimensions

Height	4.83 in. (123 mm)
Width	4.25 in. (108 mm)
Depth	2.03 in. (52 mm)

Weight

7 oz (199 g)

Compliance

Regulatory Model: M201933002

cUL916, cUL2043

Intertek® Listed for US & Canada, IC, FCC Part 15 Class A digital device, UL 916, UL 2043, UL 94 5VA

ZUMLINK-JBOX-20A-PLUG Dimension Drawings

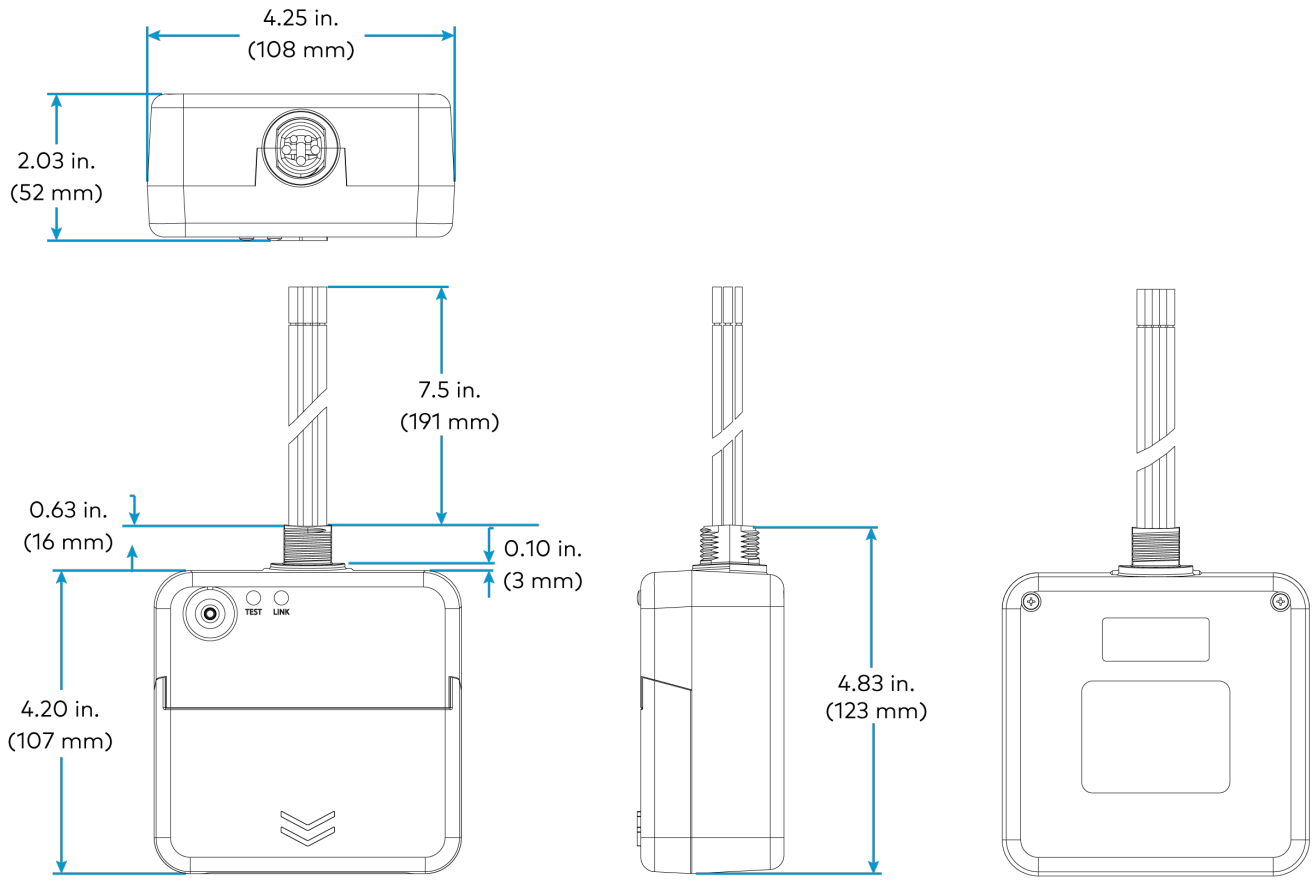

ZUMLINK-JBOX-20A-SW Specifications

Load Control

Line Voltage	100-277VAC, 50/60 Hz
Switch Load Types	LED, electronic drivers, incandescent, magnetic low-voltage, electronic low-voltage,neon/cold cathode, high-intensity discharge, small motor loads
Load Rating	20A 100-277VAC, 50/60 Hz high inrush, zero-cross switching; 0.5 HP @ 120-277VAC
Short Circuit Protection	40A non-replaceable fuse

Wired Communications

ZUMLINK (ROOM)	(2) RJ-45 ports; In-room Zūm Link device daisy-chaining; 85mA power available for Zūm Link devices, including ZUMLINK-KP keypads; Maximum 750mA pass-through current including any internal power supply
24V, OCC, GND	Occupancy sensor input; 85mA available output current; Spring clamp connector
24V, PHO, GND	Photo sensor input; Spring clamp connector
OVR, GND	Override control input; Spring clamp connector

Controls and Indicators

TEST	(1) Pushbutton and (1) green LED; Push to toggle the switched load output on and off; Press and hold to cycle the dimming level up and down; LED indicates that the load is turned on; LED lights and flashes during room setup and factory reset
ZUMLINK Status	(1) bi-color green/red LED; LED lights green in normal operation; LED lights red when a fault is detected

Connections

Hot	(1) 14 AWG Class 1 flying lead; Black, line power input
Neutral	(1) 14 AWG Class 1 flying lead; White, neutral
Switched Load	(1) 14 AWG Class 1 flying lead; Red, switched load output

Environmental

Temperature	32° to 104°F (0° to 40°C)
Humidity	10% to 90% RH (noncondensing)

Construction

Housing	Plastic, white, UL 94 5VA flame rated
Mounting	Mounts to the side of a 4 in. square junction box via a 1/2 in. conduit knockout; Meets the requirements of UL 2043 for installation in an environmental air-handling (plenum) space

Dimensions

Height	4.83 in. (123 mm)
Width	4.25 in. (108 mm)
Depth	2.03 in. (52 mm)

Weight

7 oz (199 g)

Compliance

Regulatory Model: M201933002

cUL916, cUL2043

Intertek® Listed for US & Canada, IC, FCC Part 15 Class A digital device, UL 916, UL 2043, UL 94 5VA

ZUMLINK-JBOX-20A-SW Dimension Drawings

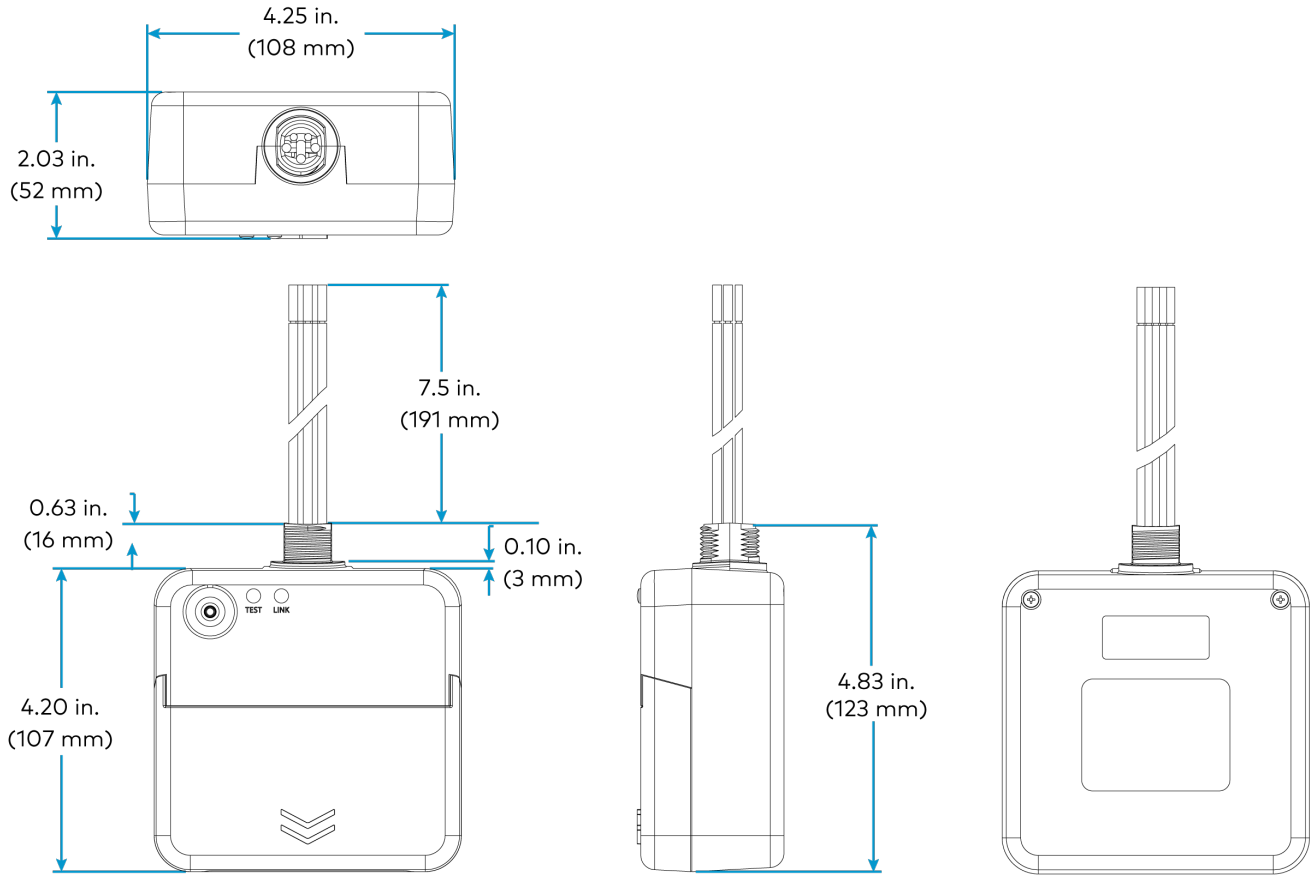

ZUMLINK-EXP-16A-DIMU Specifications

Load Control

Dimmer Channels	1
Load Rating	16A
Line/Load Voltage:	100-277VAC, 50/60 Hz
Dimmable Load Types:	Incandescent, LED, electronic low-voltage, magnetic low-voltage, neon/cold cathode, 2-wire fluorescent

Communications

Zūm Link	(2) RJ-45 ports; In-room Zūm Link device daisy-chaining

Controls and Indicators

TEST	(1) Pushbutton and (1) green LED, press and release the button to toggle the load output on and off, press and hold to cycle the dimming level up and down, LED indicates the load output is energized, also used for room setup and factory reset
DIM MODE	(1) Pushbutton (behind cover), press to cycle through dimming modes: auto detect (default), reverse phase, forward phase, or center phase
AUTO	(1) Red LED, indicates auto load type detection is selected and enabled
REV	(1) Red LED, indicates reverse phase mode is enabled (automatically or manually)
FWD	(1) Red LED, indicates forward phase mode is enabled (automatically or manually)
CENTER	(1) Red LED, indicates center phase mode is enabled (manually)
ZEROCROSS FILTER	(1) Pushbutton (behind cover), press to select zero-cross detection mode
BASIC	(1) Green LED (behind cover), indicates when using basic zero-cross detection
FILTER	(1) Green LED (behind cover), indicates when using filtered zero-cross detection (default)
RESET	(1) Pushbutton (behind cover), initiates hardware reset
LINK	(1) bi-color green/red LED; LED lights green in normal operation; LED lights red when a fault is detected
ERROR	(1) Red LED, indicates a variety of error conditions via blinking patterns
PWR Status	(1) Green LED (behind cover), indicates line power is applied to either LINE terminal

Connections

ZUMLINK	(2) RJ-45 orange ports; In-room Zūm Link device daisy-chaining; Maximum 750mA pass-through current including any internal power supply
NEUT	(3) Captive screw terminals; Neutral connections for feed and load; 24-10 AWG (0.25 to 4.0 mm2) wire size

LINE	(2) Captive screw terminals; Line power feed input and pass-through; 24-10 AWG (0.25 to 4.0 mm2) wire size
LOAD	(1) Captive screw terminal; Dimmed load output; 24-10 AWG (0.25 to 4.0 mm2) wire size
Ground	(1) 3-terminal grounding block

Environmental

Temperature	32° to 104°F (0° to 40°C)
Humidity	10% to 90% RH (noncondensing)

Construction

Housing	NEMA Type 1, galvanized steel with gray matte powder coated removable front cover panel, extruded aluminum heat sink on rear, (2) integral mounting flanges, (4) 1/2" or 3/4" conduit knockouts on bottom and lower left & right sides
Mounting	Surface mount, must be oriented upright and mounted to a vertical surface with 6 in. (153 mm) minimum spacing above and below for proper ventilation and heat dissipation

Dimensions

Height	8.80 in. (223 mm)
Width	6.40 in. (162 mm)
Depth	3.17 in. (80 mm)

Weight

3.43 lb (1.56 kg)

Compliance

Regulatory Model: M201933001

IC, FCC Part 15 Class A digital device, UL508

ZUMLINK-EXP-16A-DIMU Dimension Drawings

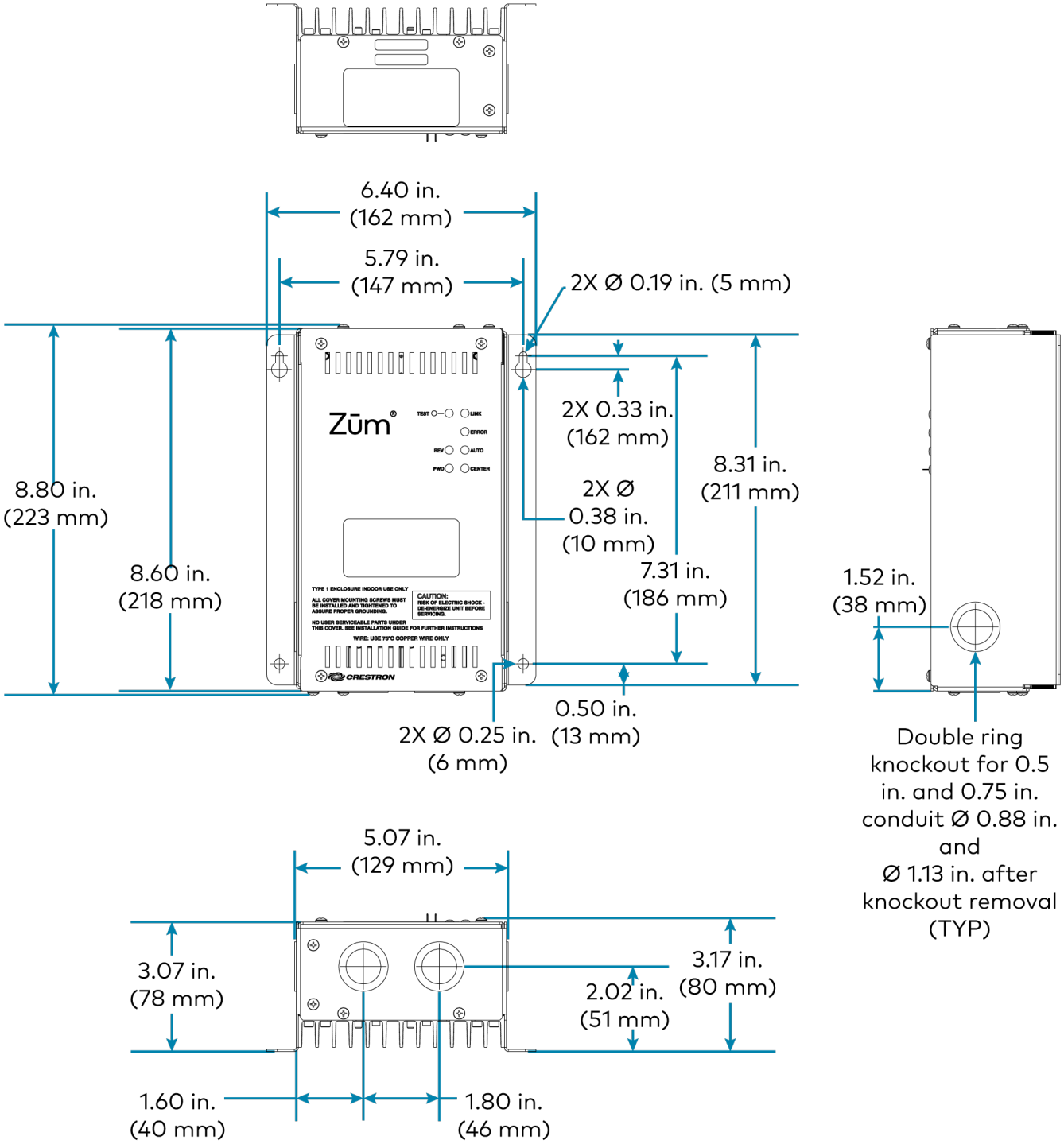

Keypad Specifications

Product specifications for the ZUMLINK-KP are provided below.

Product Specifications

Power Requirements

Powered by 24V ZUMLINK Bus

Communications

Zūm Link	(2) RJ-45 ports; Connects to Zūm Link device for load control; Provides in-room device daisy-chaining
Bluetooth	Bluetooth low energy, Version 4.0; Pairs with a mobile device running the Zūm app

Connections

ZUMLINK	(2) RJ-45 orange ports; In-room Zūm Link device daisy-chaining; Maximum 750mA pass-through current including any internal power supply

Controls and Indicators

Push button	(1) rocker button preprogrammed; Configurable with combinations of ZUMLINK-BTN2, ZUMLINK-BTN4, ZUMLINK-BTN6, ZUMLINK-BTN8 in pad printed or engraved models, sold separately
LED	(1) Green LED; Indicates On/Off status of connected load Lights briefly to indicate a button press

Environmental

Temperature	32° to 104°F (0° to 40°C)
Humidity	10% to 90% RH (noncondensing)

Construction

Composition	Plastic housing and front face
Mounting	Mounts in a 1-gang, 3.5 in. (89 mm) deep electrical box (not supplied)
Faceplate	Requires a decorator style faceplate (FP-G Series, not supplied)

Dimensions

Height	4.13 in. (105 mm)
Width	1.50 in. (38 mm)
Depth	1.28 in. (33 mm)

Weight

5 oz (142 g)

Compliance

Regulatory Model: M201937001

UL® Listed for US & Canada, IC, FCC Part 15 Class B digital device, UL 916, CSA C22.2 No. 205, CEC Title 24, ASHRAE 90.1, IECC

Dimension Drawings

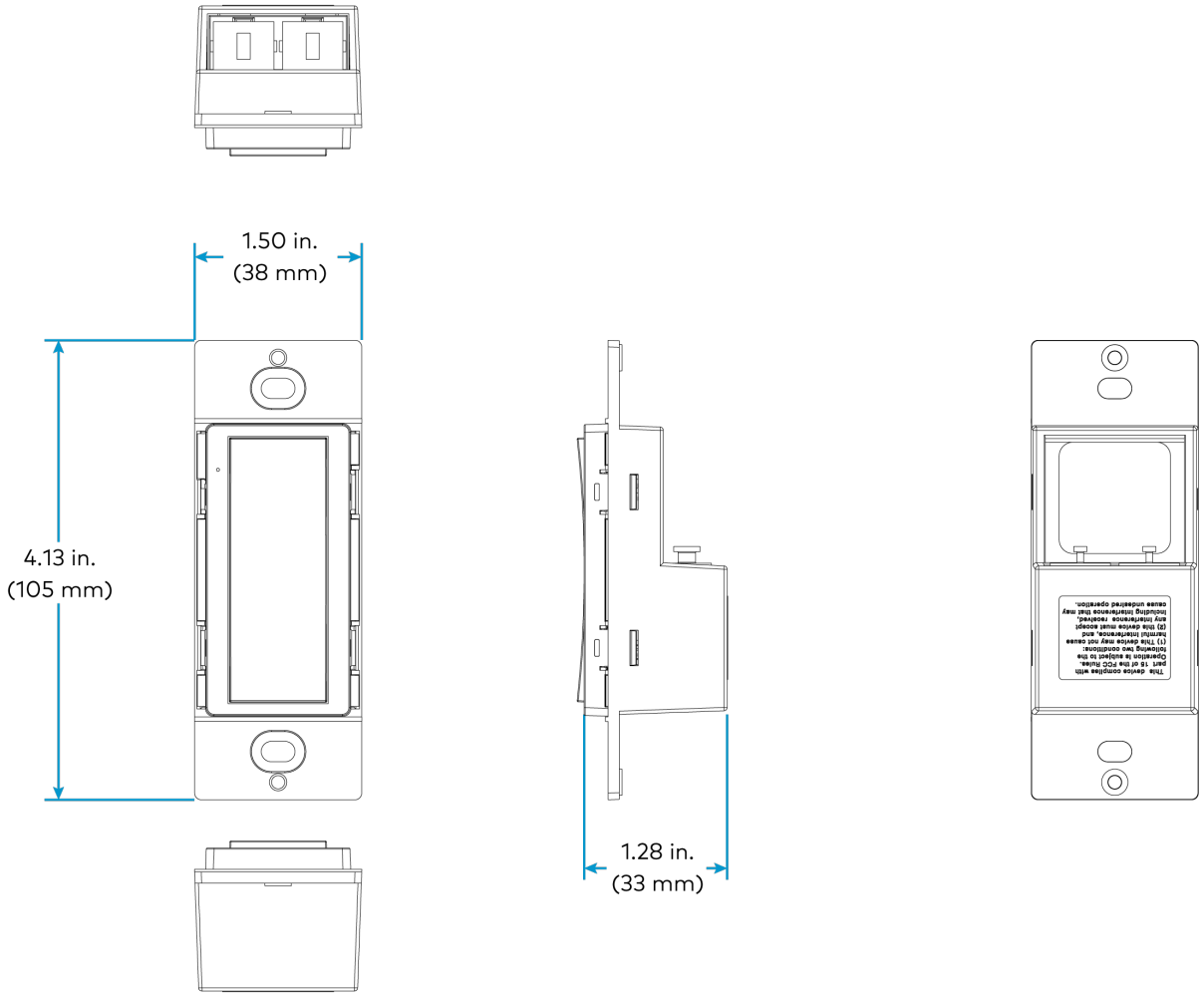

Presence Detector Specifications

Zūm Link Presence include:.

Presence Detector with Daylight Sensing

- ZUMLINK-IR-QUATTRO-DLS and ZUMLINK-IR-QUATTRO-DLS-RLY Product Specifications on page 59
- ZUMLINK-IR-QUATTRO-HD-DLS and ZUMLINK-IR-QUATTRO-HD-DLS-RLY Product Specifications on page 61
- ZUMLINK-DT-QUATTRO-DLS and ZUMLINK-DT-QUATTRO-DLS-RLY Product Specifications on page 63
- ZUMLINK-US-QUATTRO-DLS and ZUMLINK-US-QUATTRO-DLS-RLY Product Specifications on page 69
- ZUMLINK-US-HALLWAY-DLS and ZUMLINK-US-HALLWAY-DLS-RLY Product Specifications on page 65
- ZUMLINK-US-ONEWAY-DLS and ZUMLINK-US-ONEWAY-DLS-RLY Product Specifications on page 67

ZUMLINK-IR-QUATTRO-DLS and ZUMLINK-IR-QUATTRO-DLS-RLY Product Specifications

Power Requirements

Power Rating	18 - 24VDC/VAC (14 mA)
Control Output	1A @ 30VAC/VDC

Passive Infrared (PIR) Detection

Coverage	360° square mechanically scalable detection zones
Sensors	Single infrared pyroelectric detector
Detection Zones	**Presence**: Major motion as described by NEMA WD7; Maximum: 30 x 30 ft (900 sq ft) **Radial**: Motion either directly toward or away from the sensor; Maximum: 30 x 30 ft (900 sq ft) **Tangential**: Motion perpendicular to the sensor; Maximum: 46 x 46 ft (2,116 sq ft)
Light Level Setting	10-1000lux / 1-100 fc

Controls & Indicators

LED	(3) Blue LEDs on the sensor head frontplate Flashes upon start up and when triggered to identify itself

Connections

ZUMLINK	(2) RJ-45 orange ports; In-room Zūm Link device daisy-chaining; Maximum 750mA pass-through current including any internal power supply
Output Relays	(1) Green: Normally open
(Relay models only)	(1) Blue: Normally closed
	(1) Red: Common

Environmental

Temperature	32° to 104°F (0° to 40°C)
Rating	IP20 rated

Enclosure

Material	Plastic
Mounting	Mount directly in the ceiling, 4 in. square or round junction boxes (not included), or 3 in. mud rings (not included)

Dimensions

Height	4.73 in. (121 mm)
Width	4.73 in. (121 mm)
Depth	3.03 in. (77 mm)

Compliance

Regulatory Mode: M202111001, M202111002, M202111003, and M202111004

UL® Listed

Dimension Drawings

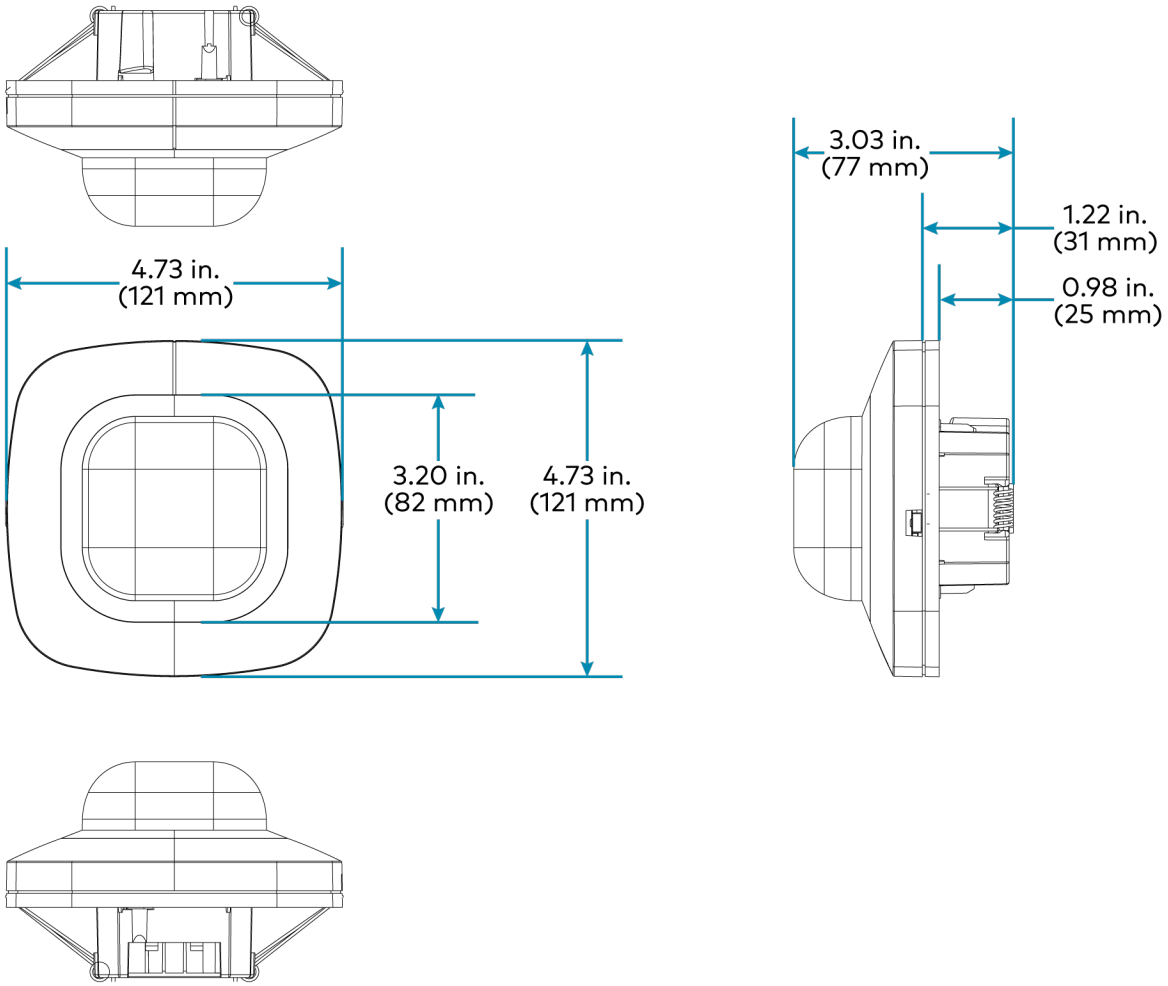

ZUMLINK-IR-QUATTRO-HD-DLS and ZUMLINK-IR-QUATTRO-HD-DLS-RLY Product Specifications

Power Requirements

Power Rating	18 - 24VDC/VAC (14 mA)
Control Output	1A @ 30VAC/VDC

High Definition Passive Infrared (PIR) Detection

Coverage	360° square mechanically scalable detection zones
Sensors	4 infrared pyroelectric detectors

Detection Zones	**Presence**: Major motion as described by NEMA WD7; Maximum: 50 x 50 ft (2,500 sq ft)/ 15 x 15. m (225 sq m)
Light Level Setting	10-1000lux / 1-100 fc

Controls & Indicators

LED	(3) Blue LEDs on the sensor head frontplate Flashes upon start up and when triggered to identify itself

Connections

ZUMLINK	(2) RJ-45 orange ports; In-room Zūm Link device daisy-chaining; Maximum 750mA pass-through current including any internal power supply
Output Relays	(1) Green: Normally open
(Relay models only)	(1) Blue: Normally closed (1) Red: Common

Environmental

Temperature	32° to 104°F (0° to 40°C)
Rating	IP20 rated

Enclosure

Material	Plastic
Mounting	Mount directly in the ceiling, 4 in. square or round junction boxes (not included), or 3 in. mud rings (not included)

Dimensions

Height	4.73 in. (121 mm)
Width	4.73 in. (121 mm)
Depth	2.82 in. (72 mm)

Compliance

Regulatory Mode: M202111001, M202111002, M202111003, and M202111004

UL® Listed

Dimension Drawings

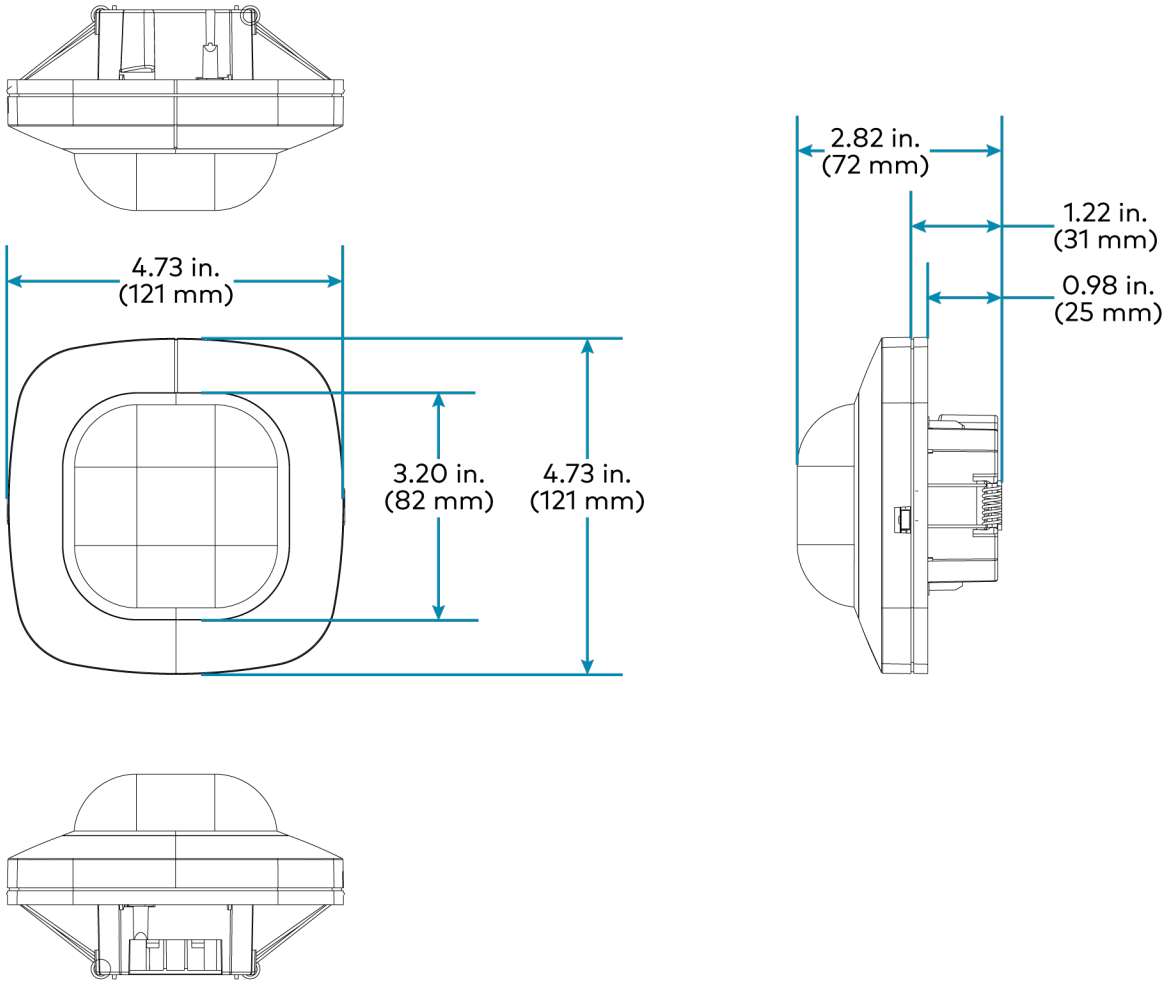

ZUMLINK-DT-QUATTRO-DLS and ZUMLINK-DT-QUATTRO-DLS-RLY Product Specifications

Power Requirements

Power Rating	18 - 24VDC/VAC (22 mA)
Control Output	1A @ 30VAC/VDC

Dual Technology Detection

Sensing	Passive Infrared (PIR) and Ultrasonic (40 kHz) detection
Coverage	360°
Sensors	Single infrared pyroelectric detector

Detection Zones	**Presence**: Major motion as described by NEMA WD7; PIR: Maximum: 50 x 40 ft (2,000 sq ft)/ 15 x 12 m (180 sq m); US: Maximum: 40 x 30 fct (1,200 sq ft)/ 12 x 9 m (108 sq m)
Light Level Setting	10-1000lux / 1-100 fc

Controls & Indicators

LED	(3) Blue LEDs on the sensor head frontplate Flashes upon start up and when triggered to identify itself

Connections

ZUMLINK	(2) RJ-45 orange ports; In-room Zūm Link device daisy-chaining; Maximum 750mA pass-through current including any internal power supply
Output Relays	(1) Green: Normally open
(Relay models only)	(1) Blue: Normally closed (1) Red: Common

Environmental

Temperature	32° to 104°F (0° to 40°C)
Rating	IP20 rated

Enclosure

Material	Plastic
Mounting	Mount directly in the ceiling, 4 in. square or round junction boxes (not included), or 3 in. mud rings (not included)

Dimensions

Height	4.73 in. (121 mm)
Width	4.73 in. (121 mm)
Depth	2.63 in. (67 mm)

Compliance

Regulatory Mode: M202111001, M202111002, M202111003, and M202111004

UL® Listed

Dimension Drawings

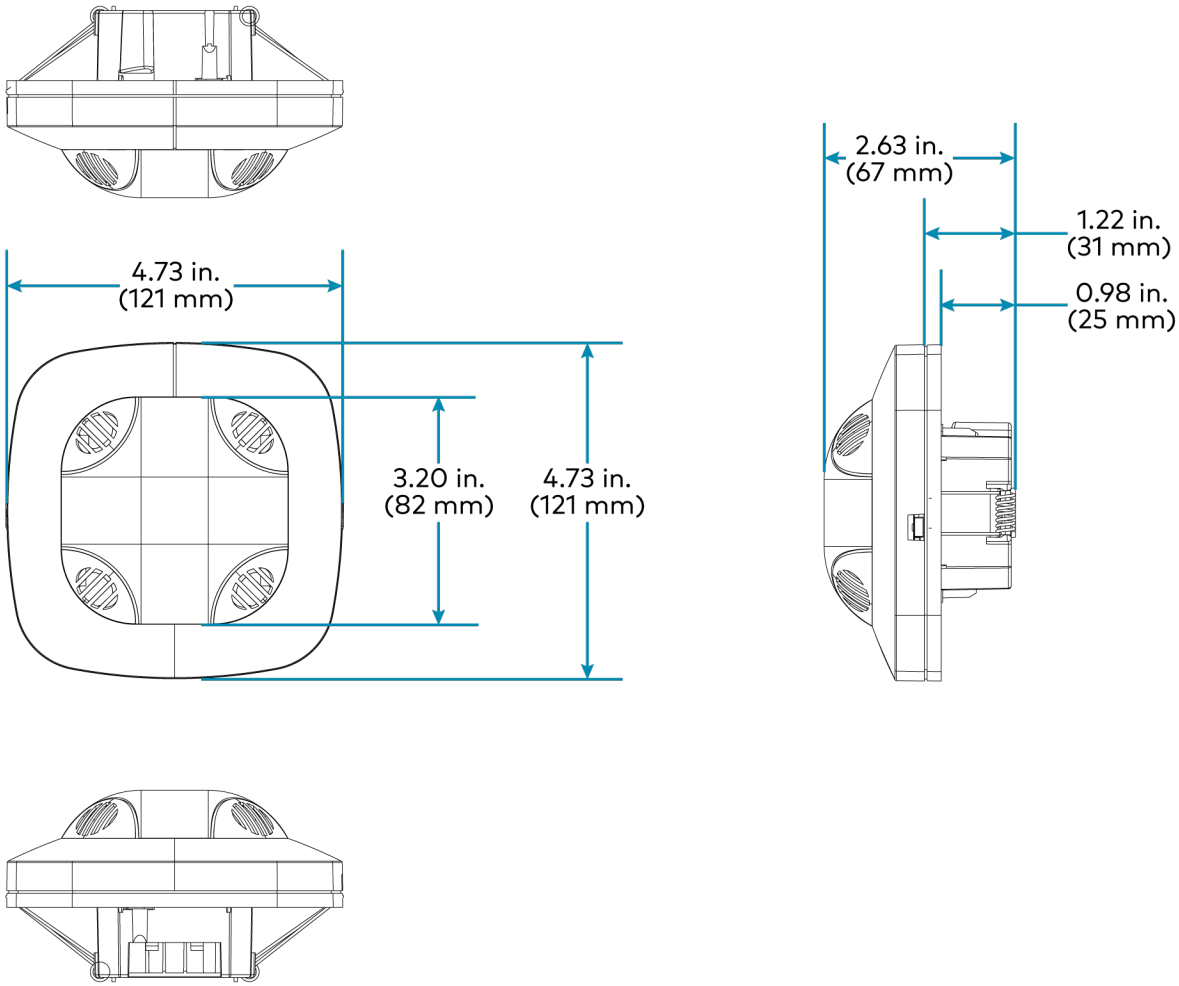

ZUMLINK-US-HALLWAY-DLS and ZUMLINK-US-HALLWAY-DLS-RLY Product Specifications

Power Requirements

Power Rating	18 - 24VDC/VAC (22 mA)
Control Output	1A @ 30VAC/VDC

Ultrasonic Detection

Sensing	Bidirectional ultrasonic (40 kHz)
Coverage	6.5 x 65 ft linear

Detection Zones	Maximum: 50 x 20 ft (1,000 sq ft)/ 15 x 6 m (90 sq m) Minimum: 40 x 20 ft (800 sq ft)/ 12 x 6 m (72 sq m)
Light Level Setting	10-1000lux / 1-100 fc

Controls & Indicators

LED	(3) Blue LEDs on the sensor head frontplate Flashes upon start up and when triggered to identify itself

Connections

ZUMLINK	(2) RJ-45 orange ports; In-room Zūm Link device daisy-chaining; Maximum 750mA pass-through current including any internal power supply
Output Relays	(1) Green: Normally open
(Relay models only)	(1) Blue: Normally closed (1) Red: Common

Environmental

Temperature	32° to 104°F (0° to 40°C)
Rating	IP20 rated

Enclosure

Material	Plastic
Mounting	Mount directly in the ceiling, 4 in. square or round junction boxes (not included), or 3 in. mud rings (not included)

Dimensions

Height	4.73 in. (121 mm)
Width	4.73 in. (121 mm)
Depth	2.84 in. (72 mm)

Compliance

Regulatory Mode: M202111001, M202111002, M202111003, and M202111004

UL® Listed

Dimension Drawings

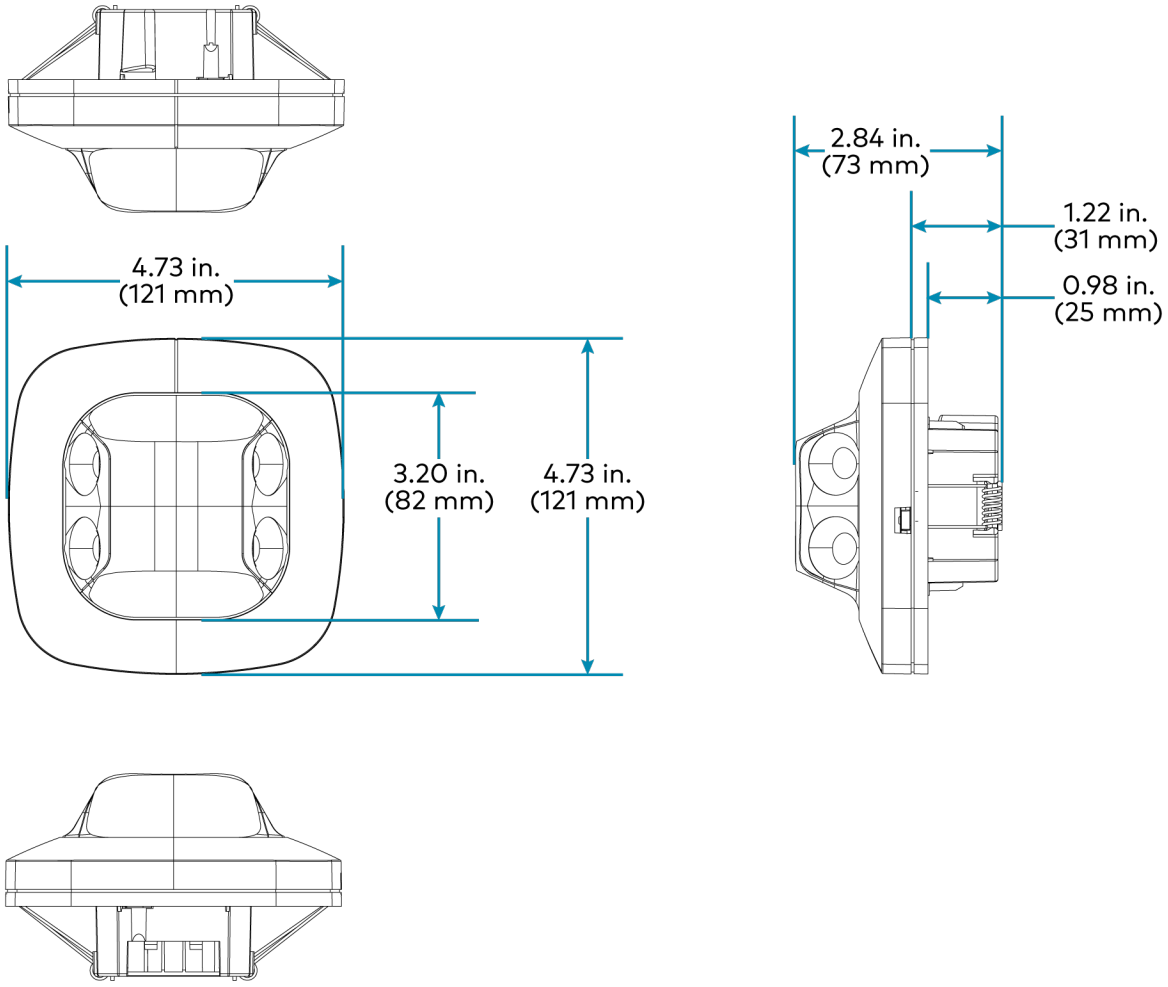

ZUMLINK-US-ONEWAY-DLS and ZUMLINK-US-ONEWAY-DLS-RLY Product Specifications

Power Requirements

Power Rating	18 - 24VDC/VAC (22 mA)
Control Output	1A @ 30VAC/VDC

Ultrasonic Detection

Sensing	Unidirectional ultrasonic (40 kHz) occupancy sensor
Coverage	6.5 x 35 ft linear

Detection Zones	Maximum: 35 x 20 ft (700 sq ft)/ 11 x 6 m (66 sq m) Minimum: 25 x 20 ft (50 sq ft)/ 8 x 6 m (48 sq m)
Light Level Setting	10-1000lux / 1-100 fc

Controls & Indicators

LED	(3) Blue LEDs on the sensor head frontplate Flashes upon start up and when triggered to identify itself

Connections

ZUMLINK	(2) RJ-45 orange ports; In-room Zūm Link device daisy-chaining; Maximum 750mA pass-through current including any internal power supply
Output Relays	(1) Green: Normally open
(Relay models only)	(1) Blue: Normally closed (1) Red: Common

Environmental

Temperature	32° to 104°F (0° to 40°C)
Rating	IP20 rated

Enclosure

Material	Plastic
Mounting	Mount directly in the ceiling, 4 in. square or round junction boxes (not included), or 3 in. mud rings (not included)

Dimensions

Height	4.73 in. (121 mm)
Width	4.73 in. (121 mm)
Depth	Depth: 2.84 in. (72 mm)

Compliance

Regulatory Mode: M202111001, M202111002, M202111003, and M202111004

UL® Listed

Dimension Drawings

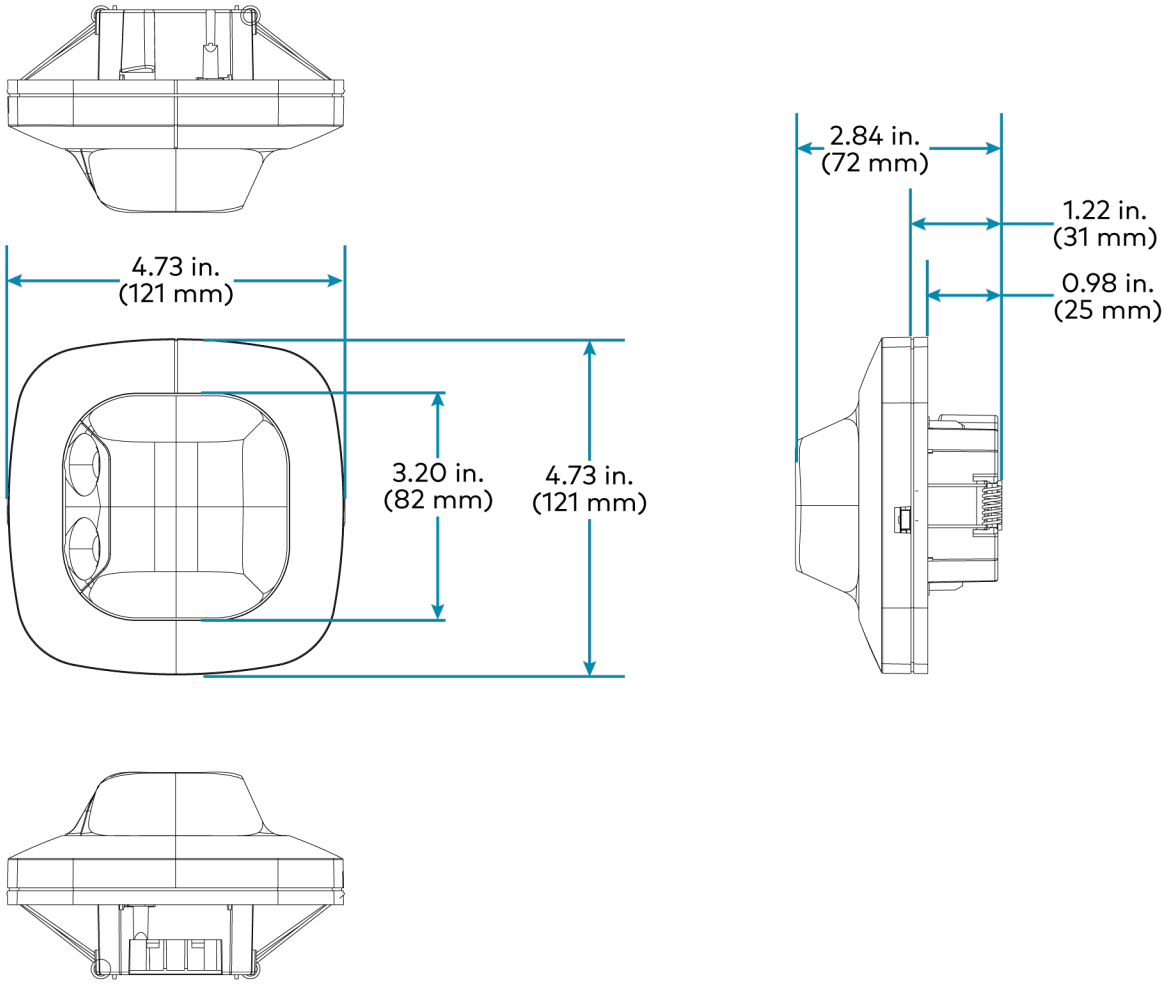

ZUMLINK-US-QUATTRO-DLS and ZUMLINK-US-QUATTRO-DLS-RLY Product Specifications

Power Requirements

Power Rating	18 - 24VDC/VAC (22 mA)
Control Output	1A @ 30VAC/VDC

Ultrasonic Detection

Sensing	Omnidirectional ultrasonic (40 kHz) presence detection
Coverage	360°

Detection Zones	**Presence**: Major motion as described by NEMA WD7; Maximum: 40 x 50 ft (2,000 sq ft)/ 12 x 15 m (180 sq m)
Light Level Setting	10-1000lux / 1-100 fc

Controls & Indicators

LED	(3) Blue LEDs on the sensor head frontplate Flashes upon start up and when triggered to identify itself

Connections

ZUMLINK	(2) RJ-45 orange ports; In-room Zūm Link device daisy-chaining; Maximum 750mA pass-through current including any internal power supply
Output Relays	(1) Green: Normally open
(Relay models only)	(1) Blue: Normally closed (1) Red: Common

Environmental

Temperature	32° to 104°F (0° to 40°C)
Rating	IP20 rated

Enclosure

Material	Plastic
Mounting	Mount directly in the ceiling, 4 in. square or round junction boxes (not included), or 3 in. mud rings (not included)

Dimensions

Height	Height: 4.73 in. (121 mm)
Width	4.73 in. (121 mm)
Depth	2.67 in. (68 mm)

Compliance

Regulatory Mode: M202111001, M202111002, M202111003, and M202111004

UL® Listed

Dimension Drawings

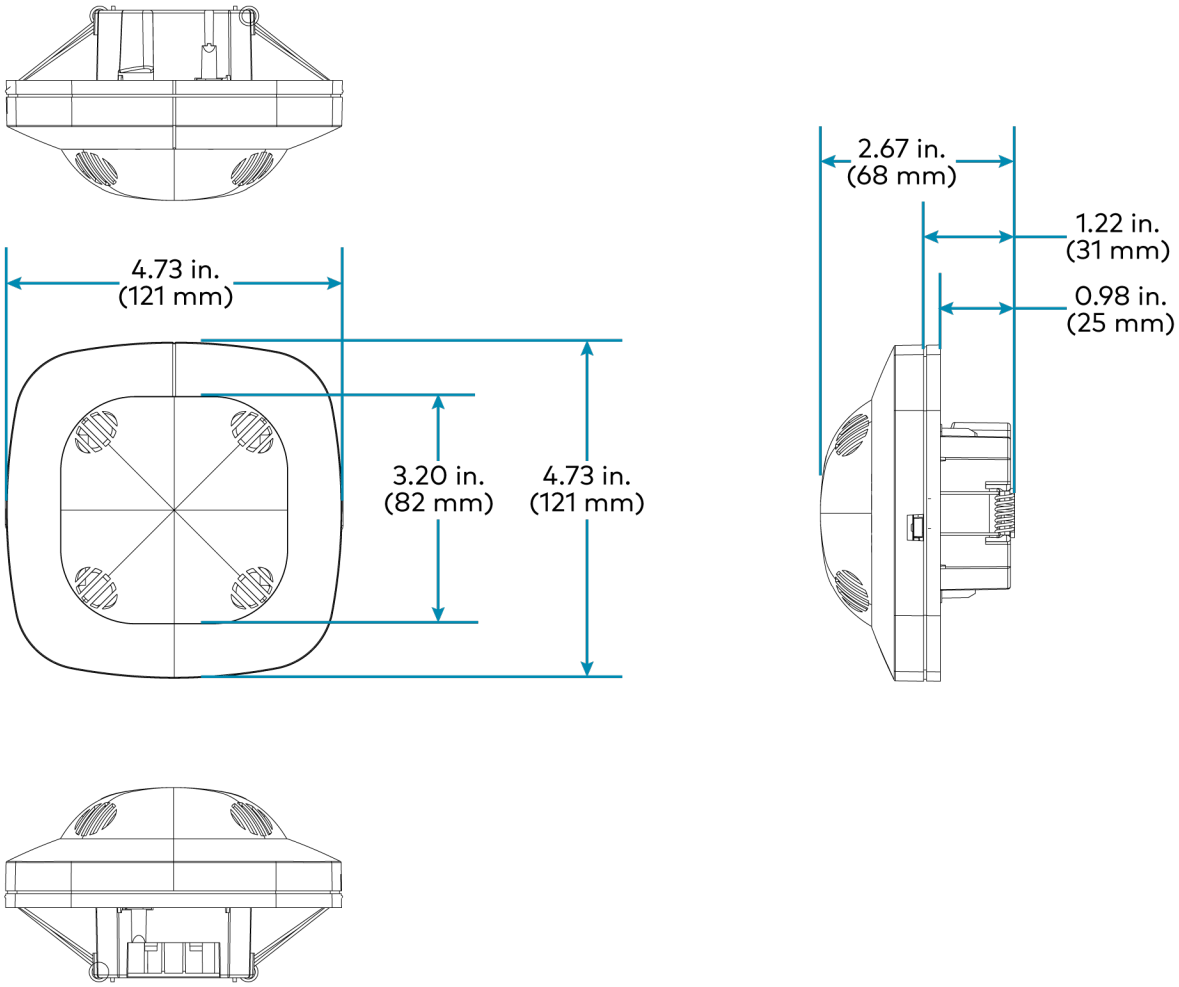

Beam Pattern Coverage

NOTE: Detection along the far edge of the detection range may be inconsistent.

ZUMLINK-IR-QUATTRO-DLS/ ZUMLINK-IR-QUATTRO-DLS-RLY

Top View

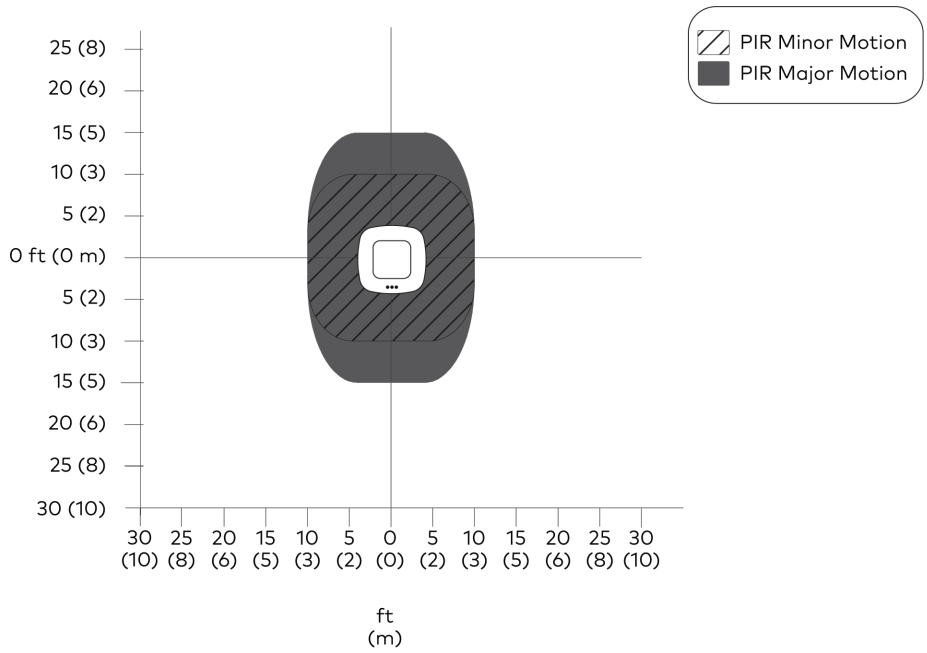

Side View Sensor Orientation A

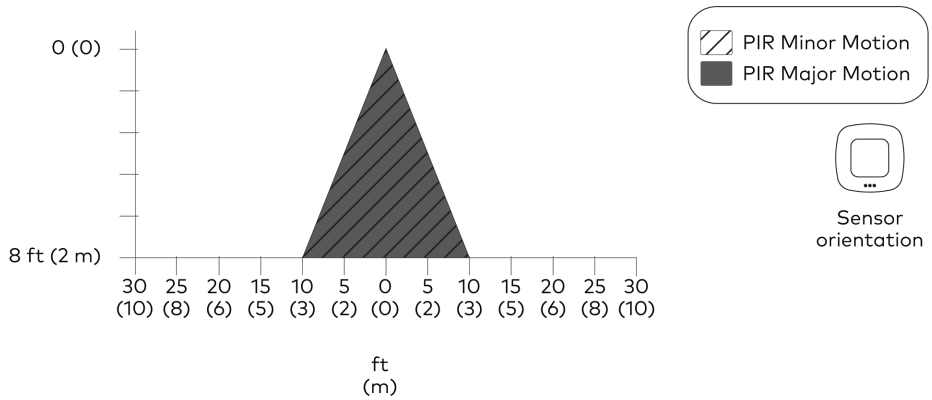

Side View Sensor Orientation B

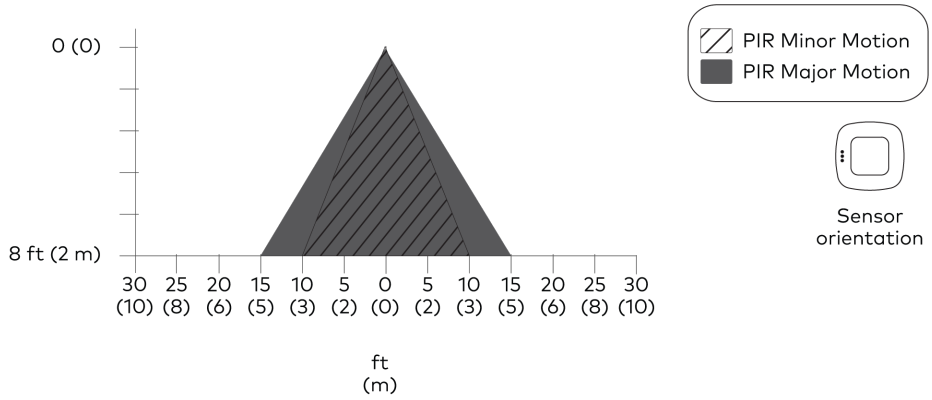

ZUMLINK-IR-QUATTRO-HD-DLS/ ZUMLINK-IR-QUATTRO-HD-DLS-RLY

Top View

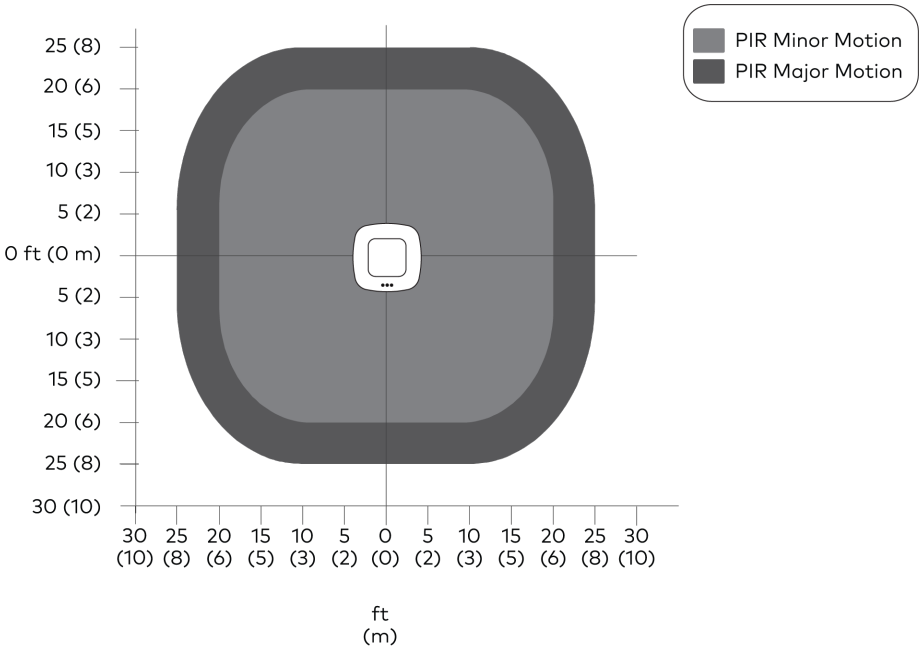

Side View

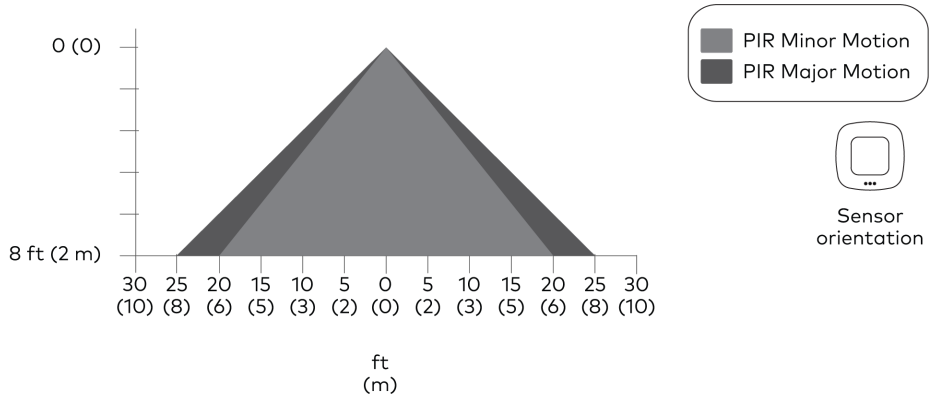

ZUMLINK-DT-QUATTRO-DLS/ ZUMLINK-DT-QUATTRO-DLS-RLY

Top View

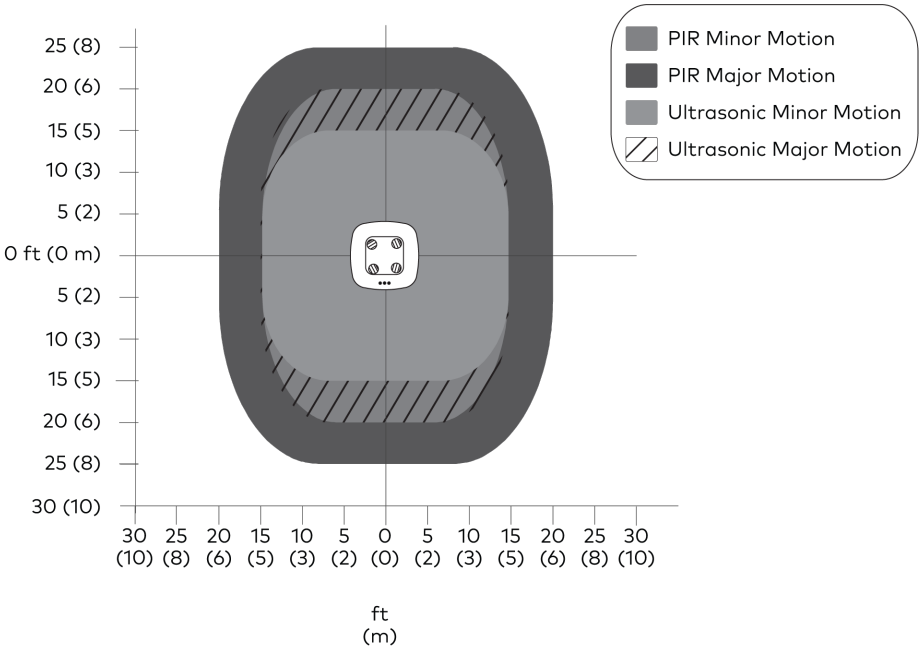

Side View Sensor Orientation A

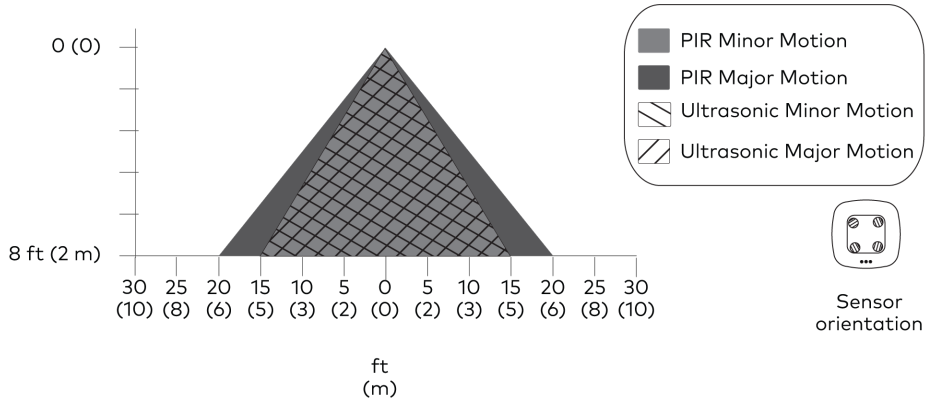

Side View Sensor Orientation B

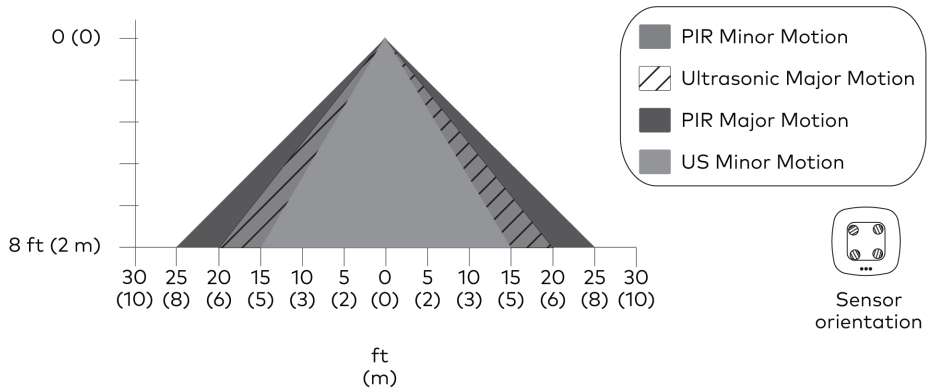

ZUMLINK-US-HALLWAY-DLS/ ZUMLINK-US-HALLWAY-DLS-RLY

Top View

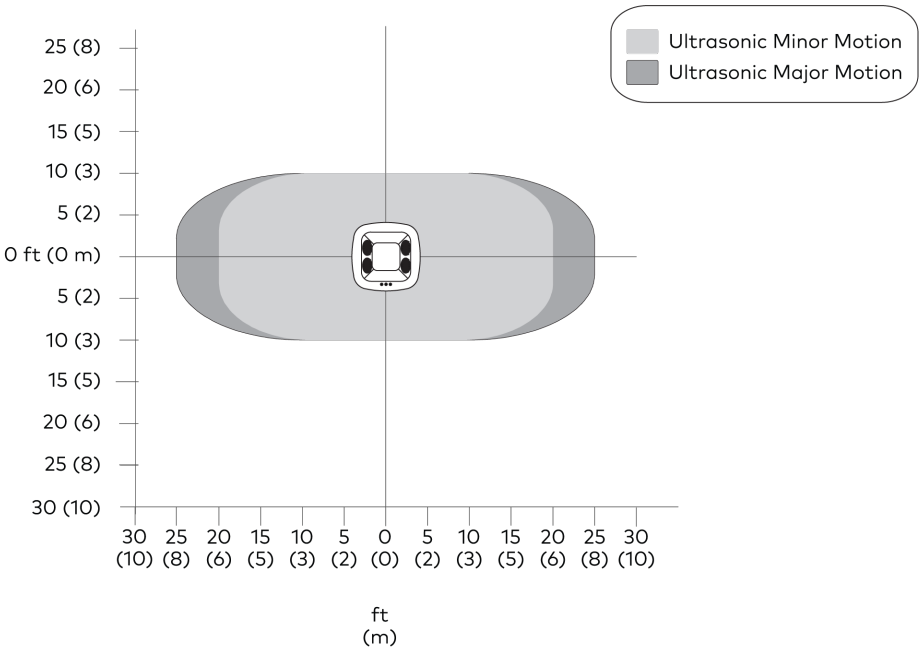

Side View Sensor Orientation A

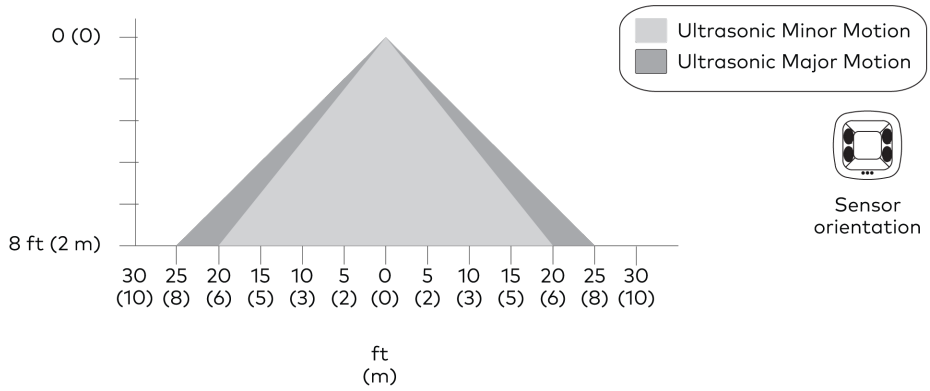

Side View Sensor Orientation B

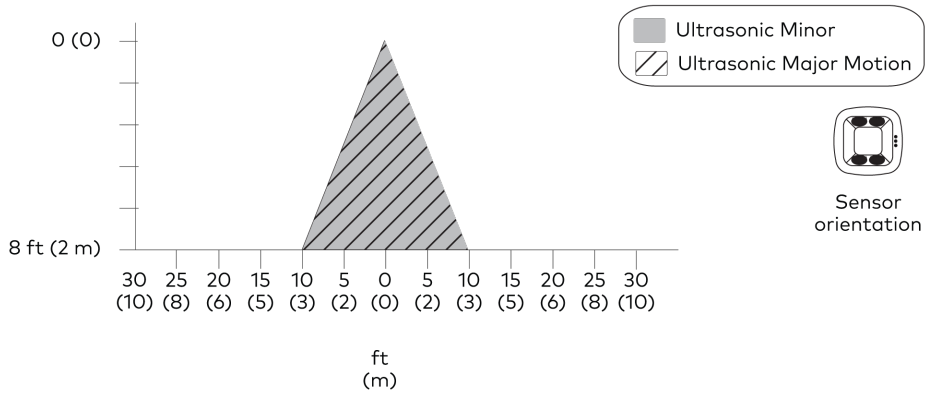

ZUMLINK-US-ONEWAY-DLS/ ZUMLINK-US-ONEWAY-DLS-RLY

Top View

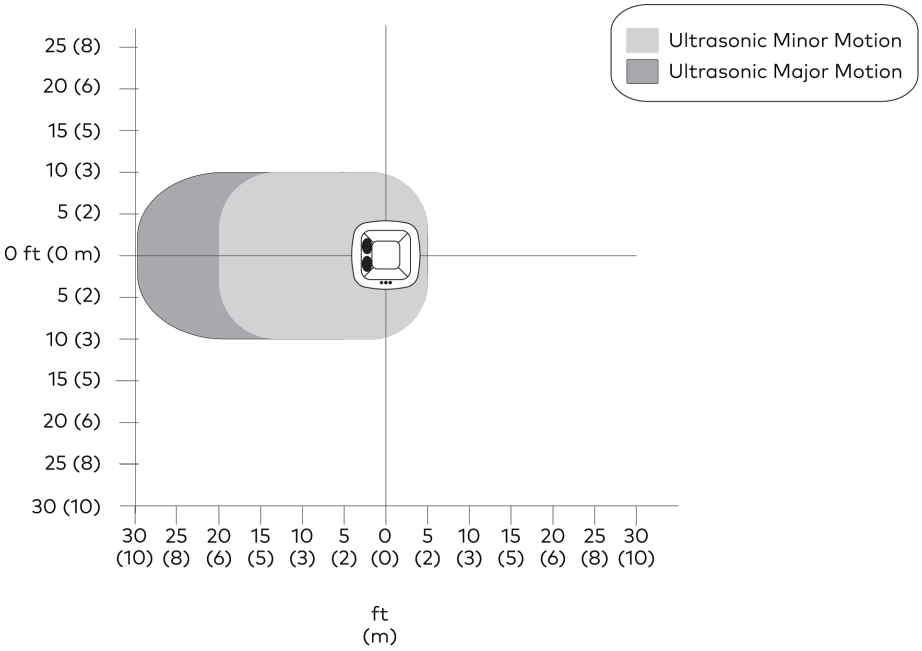

Side View Sensor Orientation A

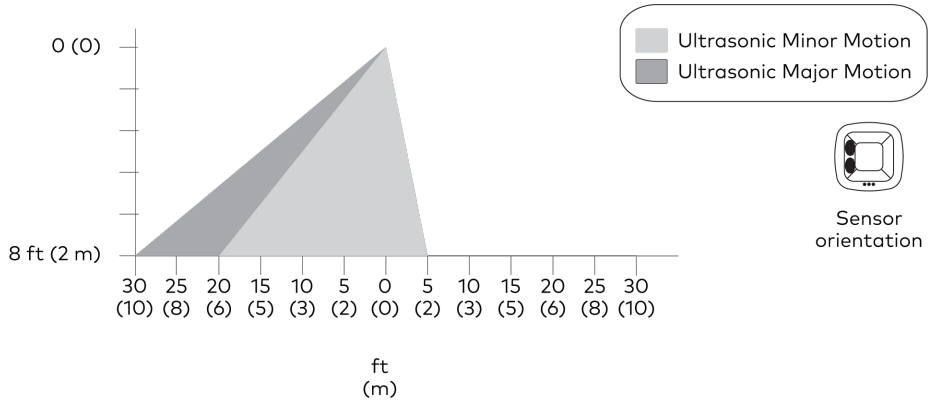

Side View Sensor Orientation B

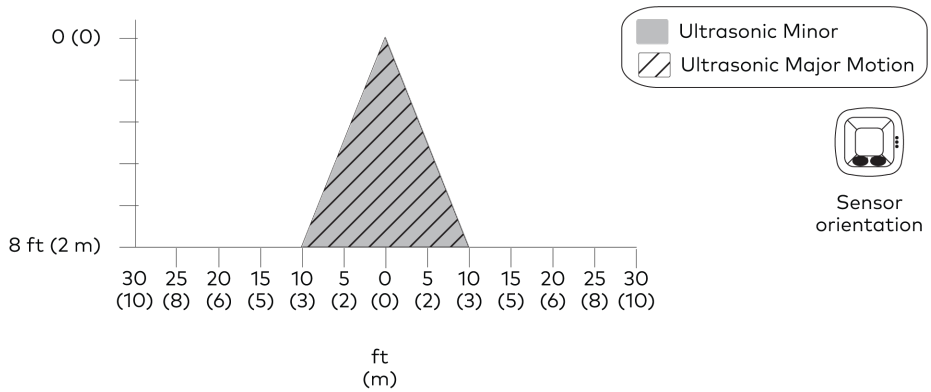

ZUMLINK-US-QUATTRO-DLS/ ZUMLINK-US-QUATTRO-DLS-RLY

Top View

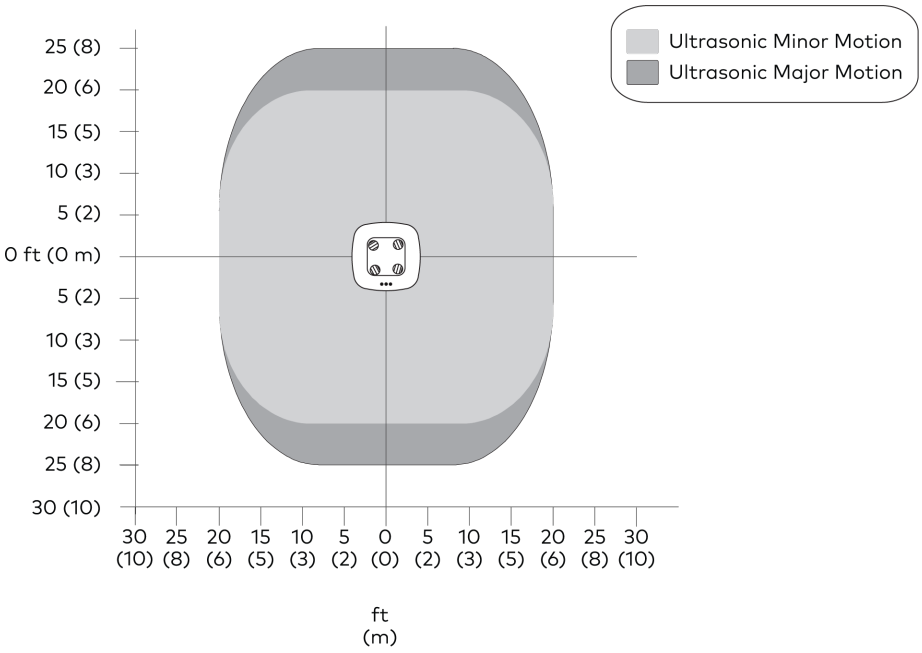

Side View Sensor Orientation A

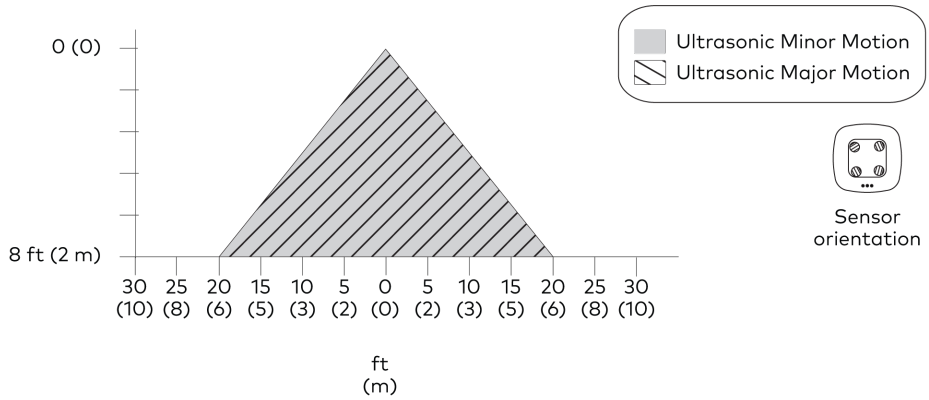

Side View Sensor Orientation B

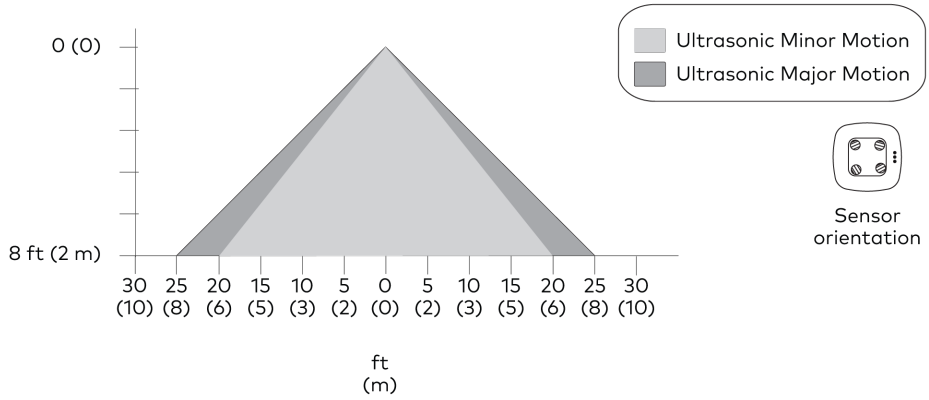

Hub Specifications

Specifications for the ZUM-HUB4 are provided below.

Product Specifications

Device Support and Time Clock

Rooms	1,000 maximum; Zūm wired, Zūm wireless, and external
External Rooms and Mirrored Rooms	Varies by control system based on hardware capabilities and program complexity of the external processor[1]

Communications

Ethernet	10/100/1000 Mbps, auto-switching, auto-negotiating, auto-discovery, full/half duplex, industry-standard TCP/IP stack, UDP/IP, CIP, DHCP, SSL, TLS, SSH, SFTP (SSH File Transfer Protocol), FIPS 140-2 compliant encryption, IEEE 802.1X, SNMP, IPv4 or IPv6, Active Directory® authentication, IIS v.6.0 web server
Control Subnet	10/100/1000 Mbps Ethernet, auto-switching, auto-negotiating, auto-discovery, full/half duplex, DHCP server, DNS Server, port forwarding, isolation mode
USB	Supports computer console via front panel USB 2.0 device port

Connectors and Card Slots

MEMORY	(1) SD memory card slot; Accepts one 32 GB SD or SDHC card to enable logging and for troubleshooting purposes
USB	(1) USB Type A connector, female; USB 2.0 host port; For firmware upgrades
LAN	(1) 8-pin RJ-45 connector, female; 10Base-T/100Base-TX/1000Base-T Ethernet port; Connects to the customer's LAN
CONTROL SUBNET	(1) 8-pin RJ-45 connector, female; 10Base-T/100Base-TX/1000Base-T Ethernet port; Provides a dedicated local network for Zūm Net wireless gateways and wired rooms
NET (24 Y Z G)	(1) 4-pin 3.5 mm detachable terminal block; Connects to a GLS-SIM which facilitate Demand Response when connected to a nonsystem sensor, such as a GLS-ODT-C-NS; Not used for power
24VDC 2.0A	(1) 2.1 x 5.5 mm DC power connector; 24VDC power input; PW-2420RU power pack included
G	(1) 6-32 screw; Chassis ground lug

COMPUTER (front)	(1) USB Type B connector, female; USB 2.0 device port for configuration via computer console (cable included)

Controls & Indicators

PWR	(1) Green LED; Indicates operating power supplied from the included power pack
NET	(1) Amber LED; Not used
MSG	(1) Red LED; Indicates that the ZUM-HUB4 has generated an error message
HW-R	(1) Recessed pushbutton for hardware reset
SW-R	(1) Recessed pushbutton for software reset
LAN (rear)	(2) Bi-color green/amber LEDs; Left LED indicates Ethernet link status and connection speed; Right LED indicates Ethernet activity
CONTROL SUBNET (rear)	(2) Bi-color green/amber LEDs; Left LED indicates Ethernet link status and connection speed; Right LED indicates Ethernet activity

Power

Power Pack (included)	Input: 100–240VAC, 50/60 Hz; Output: 2.5A @ 24VDC Model: PW-2420RU
Power Consumption	15 W

Environmental

Temperature	41° to 113°F (5° to 45°C)
Humidity	10% to 90% RH (noncondensing)
Heat Dissipation	50 BTU/hr

Enclosure

Chassis	Metal, black finish
Faceplate	Extruded metal, black finish, polycarbonate label overlay
Mounting	Freestanding or 1 RU 19-inch rack-mountable; Adhesive feet and rack ears included

Dimensions

Height	1.70 in. (43 mm) without feet
Width	17.28 in. (439 mm); 19.00 in. (482 mm) with rack ears
Depth	6.47 in. (165 mm)

Weight

3.1 lb (1.42 kg)

Compliance

Regulatory Model: M201903003

UL® Listed for US & Canada, IC, CE, FCC Part 15 Class B digital device, UL 916, CEC Title 24, ASHRAE 90.1, IECC

Dimension Drawings

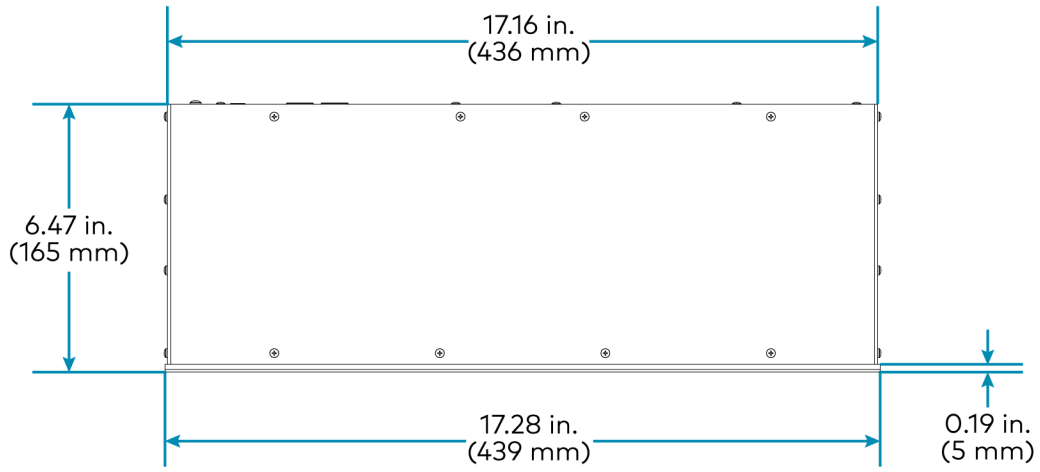

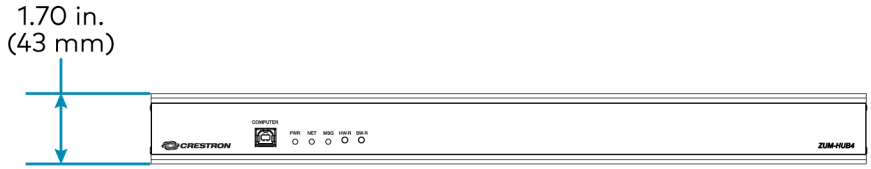

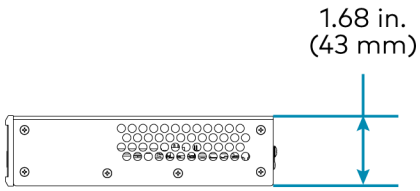

1. SIMPL+® software modules are provided for use in commissioning a Crestron control system to work with the ZUM-HUB4. The software modules run within the control system program and provide virtual connections for all the necessary intersystem control signals. A separate dedicated module is required for each external and mirrored room. Control systems are limited in the number of modules supported, ranging from 0 to 2001000 depending on the model. For further assistance, please contact Crestron Commercial Lighting Support via email at clclighting@crestron.com or by calling 855-644-7643.
2. Other Crestron control systems must be commissioned to provide the control logic required to communicate and operate as part of the Zūm network. Once integrated, each external room effectively becomes a part of the Zūm ecosystem.

Zūm App Specifications

Specifications for the Zūm app are provided below.

Compatible Devices

Apple iOS	Requires Apple iOS 14.0 or later
Android	Requires Android OS 7.0 or later

Communications

Bluetooth	Bluetooth low energy, Version 4.0; Pairs with a compatible Zūm device

Power Supply Specifications

Product specifications for the ZUMLINK-JBOX-PSU are provided below.

Product Specifications

Power Requirements

AC Input Power	100-277VAC, 50/60 Hz
Zūm Link Output Current	250mA per segment; 500mA total across both segments (4 ports); Segment 1: ports 1 and 2 Segment 2: ports 3 and 4
Zūm Link Pass-through Current	250mA max; Including internal power supply: 750mA cumulative maximum

Wired Communications

ZUMLINK	(4) RJ-45 ports

Controls and Indicators

PWR Status	(1) green LED; Power indicator

Connections

Hot	(1) 14 AWG Class 1 flying lead; Black, line power input
Neutral	(1) 14 AWG Class 1 flying lead; White, neutral

Environmental

Rating	IP20
Temperature	32° to 104°F (0° to 40°C)
Humidity	10% to 90% RH (noncondensing)

Construction

Housing	Plastic, white, UL 94 5VA flame rated
Mounting	Mounts to the side of a 4 in. square junction box via a 1/2 in. conduit knockout; Meets the requirements of UL 2043 for installation in an environmental air-handling (plenum) space

Dimensions

Height	4.93 in. (125 mm)
Width	4.25 in. (108 mm)

Depth	2.03 in. (52 mm)

Weight

7 oz (199 g)

Compliance

Regulatory Model: M202107003

cUL916, cUL2043

UL® Listed for US & Canada, IC, FCC Part 15 Class A digital device, UL 916, UL 2043, UL 94 5VA

Dimension Drawings

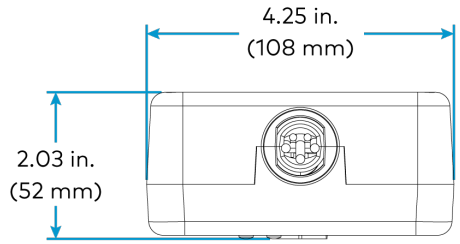

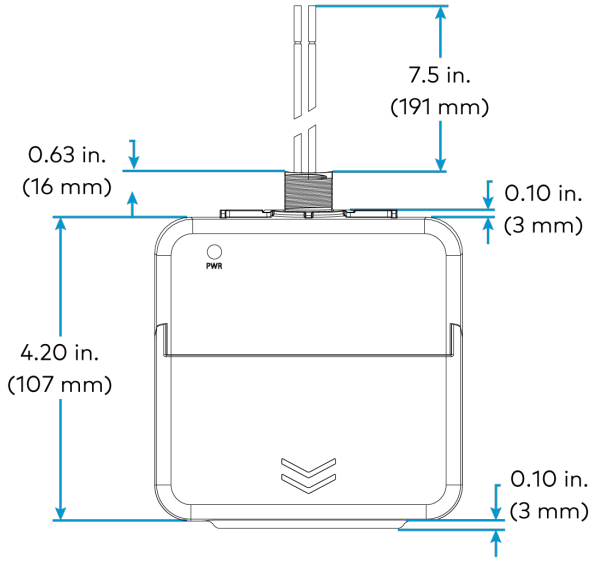

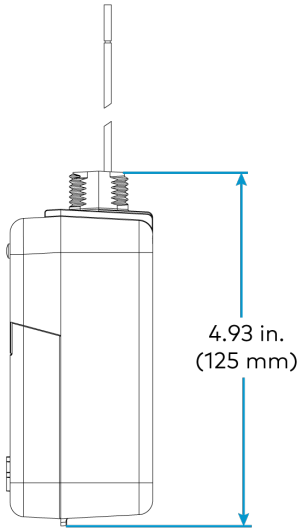

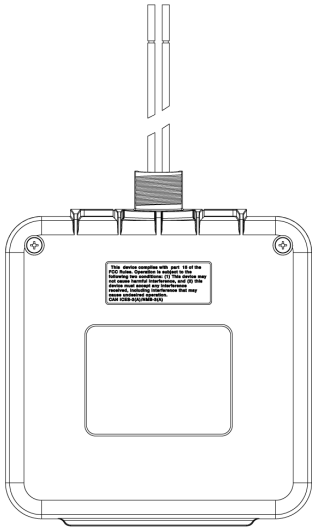

Cable Specifications

Cables are available for Zūm Net and Zūm Link applications.

- CBL-CAT5E-ZUMNET-P Specifications on page 87
- CBL-CAT5E-ZUMLINK-P Specifications on page 88

CBL-CAT5E-ZUMNET-P Specifications

Cable

Terminations	(2) RJ-45 connectors; (1) connector per end with dust cap **NOTE:** RJ-45 connectors and dust caps are not included with the CBL-CAT5E-ZUMNET-P-SP500.
Unshielded Twisted Pairs (4)	Colors: Blue/white, orange/white, green/white, brown/white; Conductors: 24 AWG solid copper Insulation: FEP, 0.005 in. nominal thickness
Outer Jacket	Color: Purple; Material: Low smoke PVC
Lengths	CBL-CAT5E-ZUMNET-P-25: 25 ft (8 m) CBL-CAT5E-ZUMNET-P-50: 50 ft (15 m) CBL-CAT5E-ZUMNET-P-100: 100 ft (30 m) CBL-CAT5E-ZUMNET-P-SP500: 500 ft (152 m) spool

CBL-CAT5E-ZUMNET-P Dimension Drawings

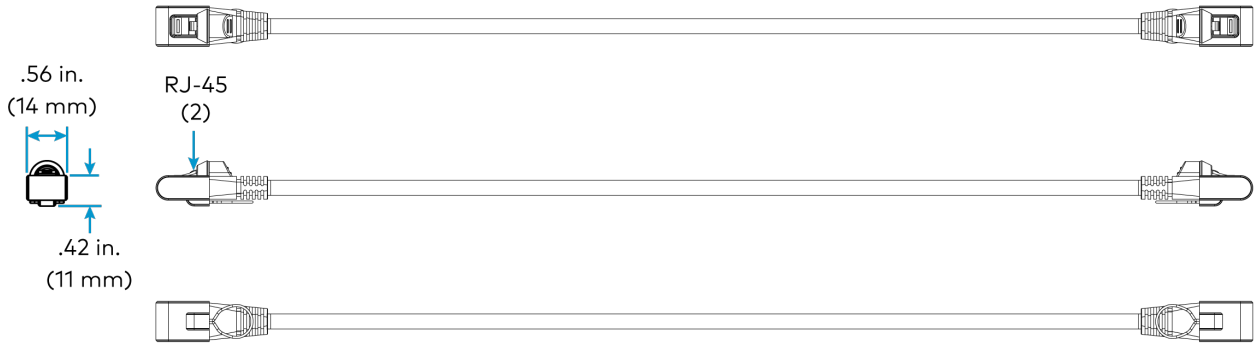

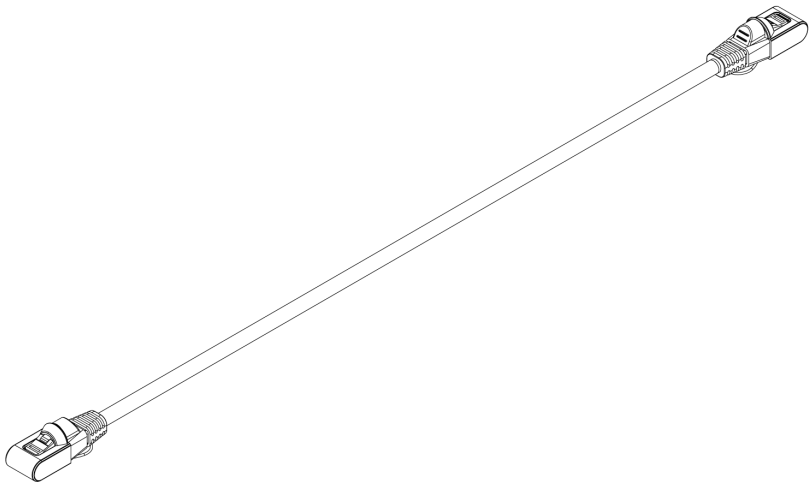

CBL-CAT5E-ZUMLINK-P Specifications

Cable

Power	Provides 24V power to Zūm Link devices
Terminations	(2) RJ-45 connectors; (1) connector per end
	NOTE: RJ-45 connectors are not included with the CBL-CAT5E-ZUMLINK-P-SP500.
Unshielded Twisted Pairs (4)	Colors: Blue/white, orange/white, green/white, brown/white; Conductors: 24 AWG solid copper Insulation: FEP, 0.005 in. nominal thickness
Outer Jacket	Color: Orange; Material: Low smoke PVC

Lengths

CBL-CAT5E-ZUMLINK-P-0.5: 6 in. (152 mm)

CBL-CAT5E-ZUMLINK-P-3: 3 ft (0.9 m)

CBL-CAT5E-ZUMLINK-P-6: 6 ft (2 m)

CBL-CAT5E-ZUMLINK-P-12: 12 ft (4 m)

CBL-CAT5E-ZUMLINK-P-25: 25 ft (8 m)

CBL-CAT5E-ZUMLINK-P-50: 50 ft (15 m)

CBL-CAT5E-ZUMLINK-P-12-10PK: 12 ft (4 m), 10 pack

CBL-CAT5E-ZUMLINK-P-25-10PK: 25 ft (8 m), 10 pack

CBL-CAT5E-ZUMLINK-P-SP500: 500 ft (152 m) spool

CBL-CAT5E-ZUMLINK-P Dimension Drawings

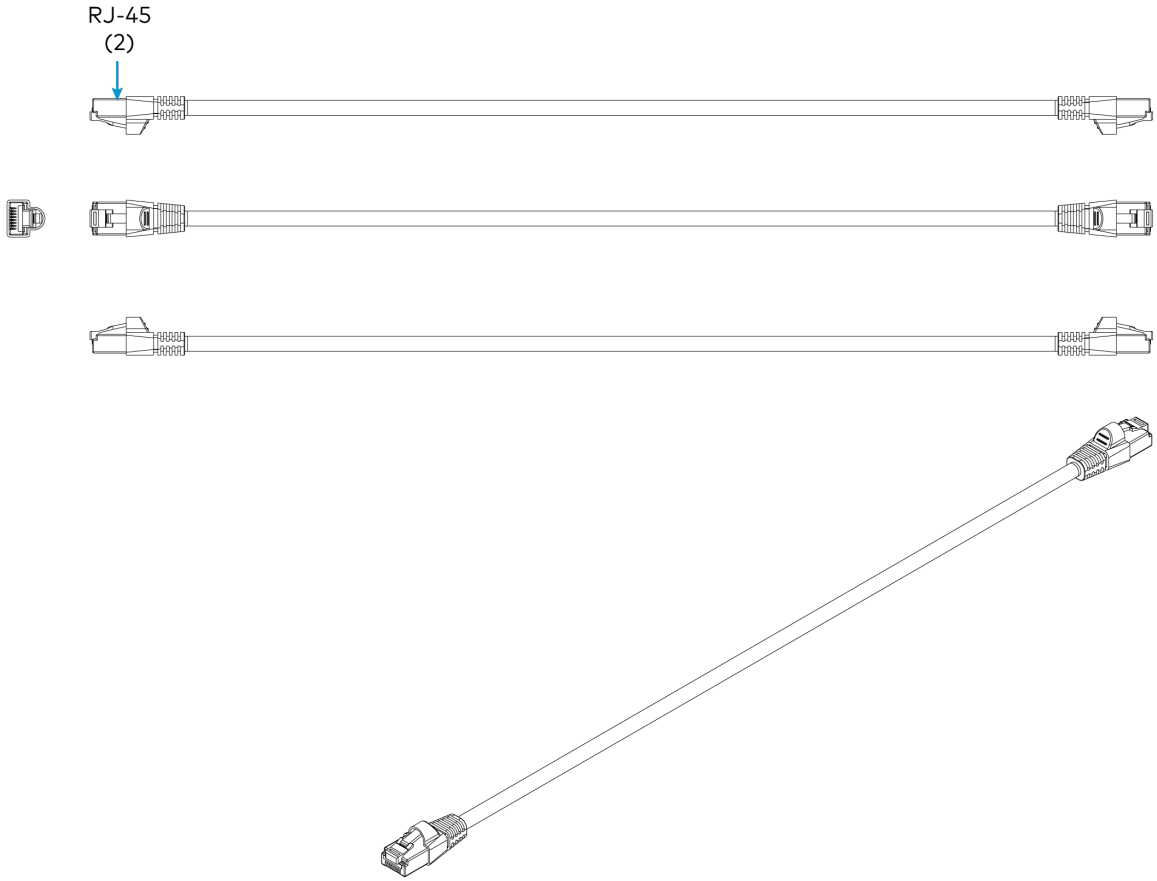

Cable Accessory Specifications

Cables accessories include the ZUMLINK-CONV-CN adapter cable and the ZUMLINK-SPLTR-RJ45 splitter.

- ZUMLINK-CONV-CN Product Specifications on page 90
- ZUMLINK-SPLTR-RJ45 Product Specifications on page 91

ZUMLINK-CONV-CN Product Specifications

Connectors

Cresnet Terminal Block	(1) 4-pin captive screw terminal block; 24: 24V power Y: Data terminal pass-through only Z: Data terminal pass-through only G: Ground
Emergency Override Terminal Block	(1) 4-pin captive screw terminal block; 24: 24V power O: Emergency override W: Future use G: Ground
ZUM LINK RJ-45	(1) female RJ-45 Zūm Link port

Construction

Conductors	24 AWG solid copper
Insulation	FEP, 0.005 in. nominal thickness
Outer Jacket	Color: Orange; plenum rated

Dimensions

Cable length	6 in. (152 mm), excluding the connectors

ZUMLINK-CONV-CN Dimension Drawings

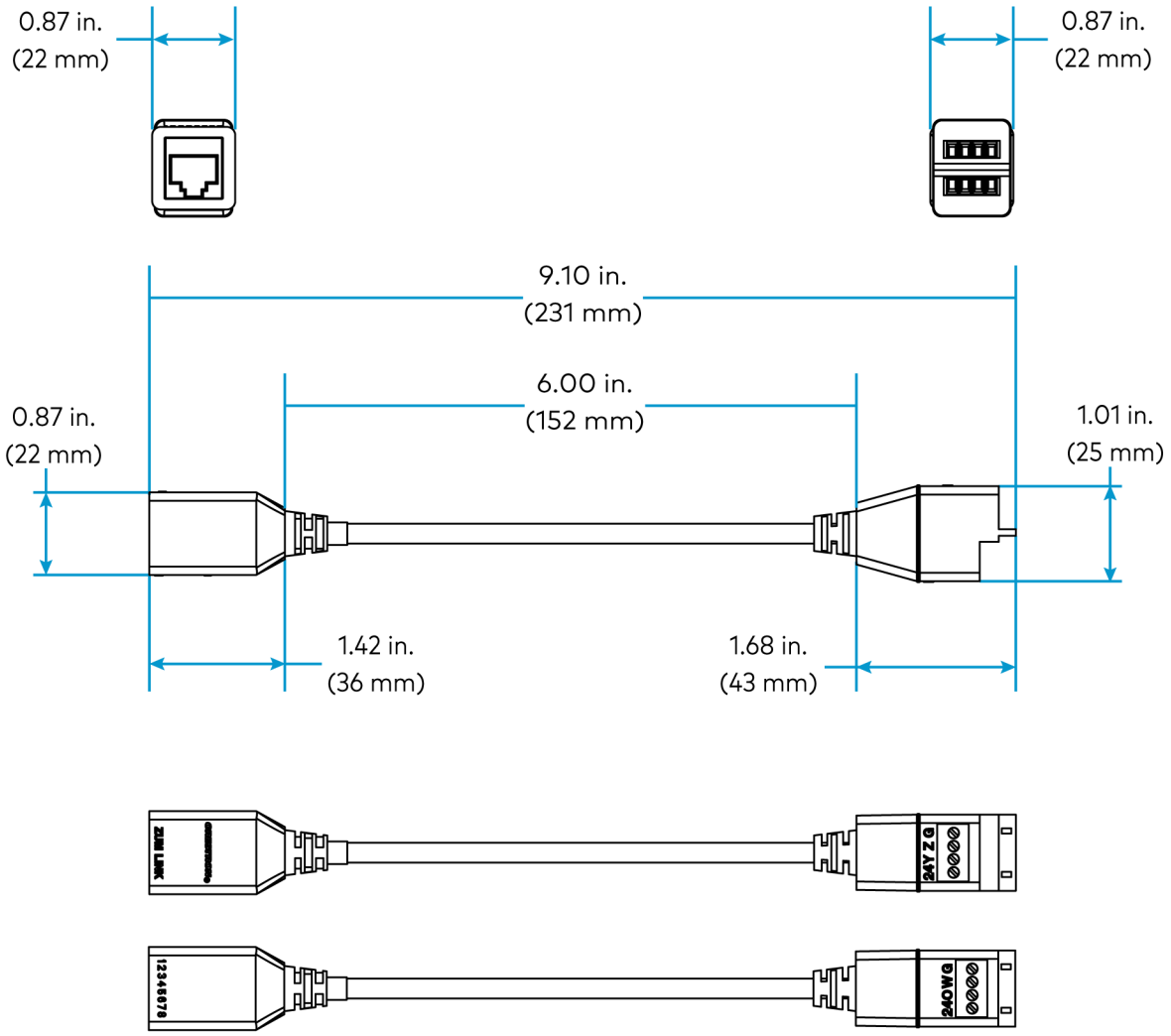

ZUMLINK-SPLTR-RJ45 Product Specifications

Connectors

ZUM LINK	(3) female RJ-45 Zūm Link connectors

Dimensions

Height	0.87 in. (22 mm)
Width	0.91 in. (23 mm)
Depth	1.34 in. (34 mm)

ZUMLINK-SPLTR-RJ45 Dimension Drawings

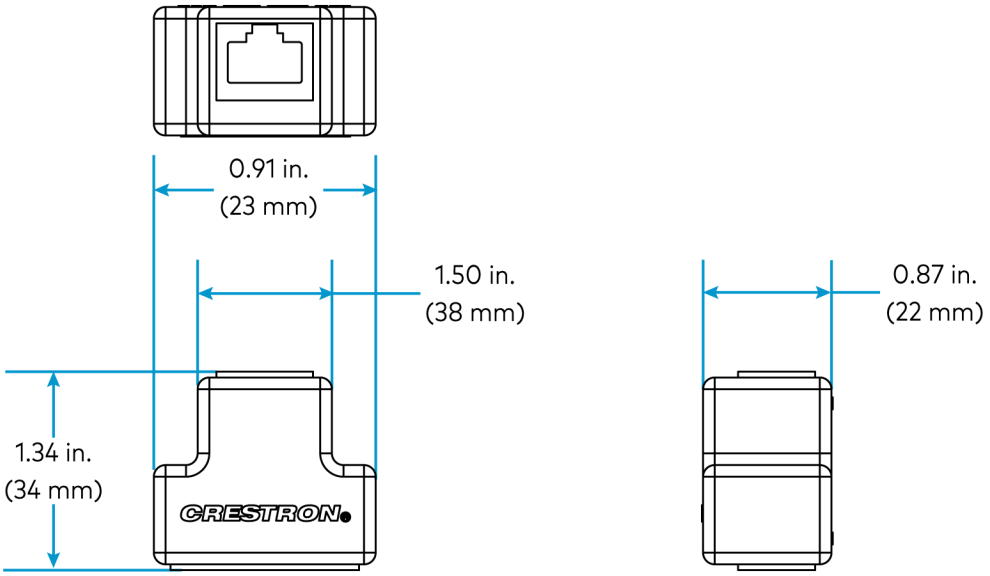

Rocker and Button Tree Specifications

Product specifications for the rocker and button tree configurations are provided below.

Product Specifications

Environmental

Temperature	32° to 104°F (0° to 40°C)
Humidity	10% to 90% RH (noncondensing)

Construction

Composition	Plastic

Dimensions

Height	2.62 in. (67 mm)
Width	1.30 in. (33 mm)
Depth	Rocker: 0.46 in. (12 mm)
	2, 4, 6, and 8 button trees: 0.47 in. (12 mm)

Weight

~0.2 oz (6.4 g)

Dimension Drawings

ZUMLINK-BTNR (BLANK shown)

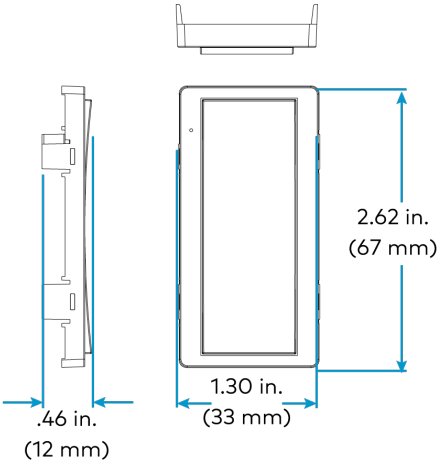

ZUMLINK-BTN2 (BLANK shown)

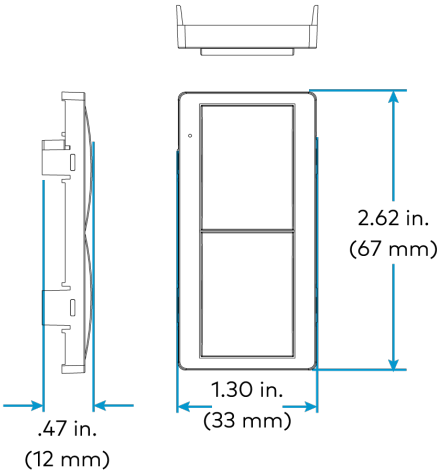

ZUMLINK-BTN4 (BLANK shown)

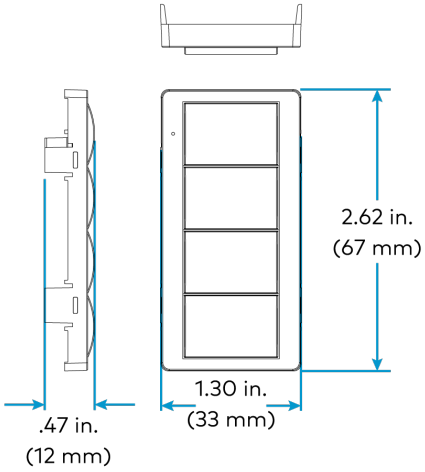

ZUMLINK-BTN6 (BLANK shown)

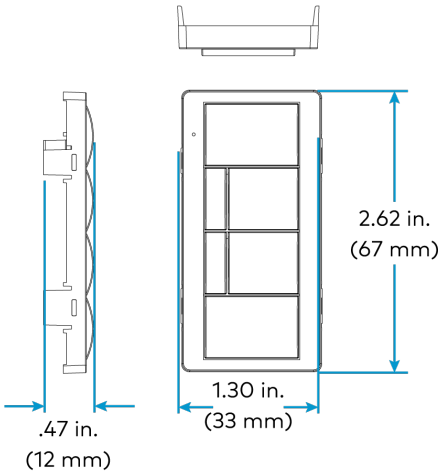

ZUMLINK-BTN8 (BLANK shown)

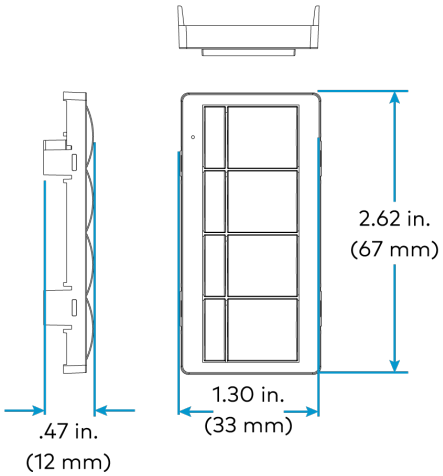

Installation

Refer to the following sections for instructions on how to install the various Zūm Wired models.

- Load Controller Installation
- Universal Dimmer Load Controller Installation
- Keypad Installation
- Presence Detectors Installation
- Hub Installation
- Power Supply Installation
- Cable Accessory Installation
- Rocker and Button Tree Installation

Load Controller Installation

The Zūm Net and Zūm Link junction box load controllers mount directly to a 4 in. square junction box (not included) and connects to other Zūm devices via CBL-CAT5E-ZUMLINK-P or CBL-CAT5E-ZUMNET-P cables (sold separately, refer to Cables). For installing the universal dimmer load controller, refer to Universal Dimmer Load Controller Installation on page 106.

NOTES:

- Zūm Net load controllers facilitate communications between rooms via CBL-CAT5E-ZUMNET-P cables (sold separately) and can be daisy-chained for network expansion. Zūm Link devices connect to ZUMNET-JBOX devices to provide in-room lighting control
- Zūm Link load controllers allow for in-room lighting control through compatible keypads and sensors. Two RJ-45 ports on the device and the CBL-CAT5E-ZUMLINK-P cables (sold separately) allow for connection to a Zūm Net device and for in-room device daisy-chaining.

In the Box

Qty.	Description
1	ZUMNET-JBOX-16A-LV, ZUMNET-JBOX-DALI, ZUMLINK-JBOX-16A-LV, ZUMLINK-JBOX-20A-PLUG, or ZUMLINK-JBOX-20A-SW Wired J-Box Load Controller
	Additional Items
5	Yellow Wire Nut, 22-10 AWG (2049245)
1	Locknut (2047626)
1	Tie Wrap (2005429)

Install the Load Controller

WARNINGS:

- To avoid fire, shock, or death, turn off the power at the circuit breaker or fuse and test that the power is off before wiring!
- Do **NOT** connect standard Ethernet ports on network-based devices to the orange Zūm Link ports on Zūm Link or Zūm Net devices. Also, do **NOT** connect the purple Zūm Net ports on Zūm Net devices to the orange Zūm Link ports on Zūm Link devices. These connections may damage network devices.

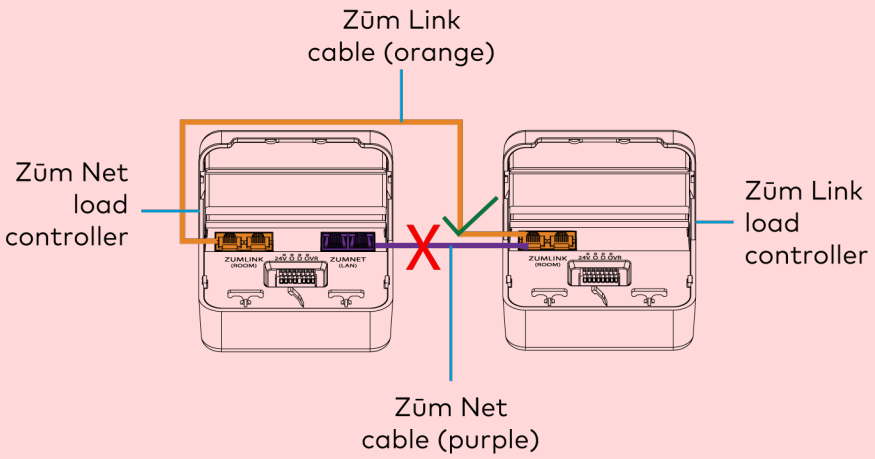

NOTES:

- Install and use this product in accordance with appropriate electrical codes and regulations.
- A licensed electrician must install this product.
- The product should project 4.40 in. (112 mm) from the junction box when installed.
- For use where temperatures are between 32° to 104°F (0° to 40°C)
- For Chicago plenum compliant installations:
  - Ensure that the junction boxes and other electrical components are rated for Chicago plenum.
  - Separate the high-voltage lines from the low-voltage cables.
  - Install two junction boxes: one junction box for the high-voltage lines and one junction box for the low-voltage cables and load controller. A 6 in. square, 3.5 in. deep box with conduit knockouts is recommended for the low-voltage cables and load controller.

To install a load controller:

1. Turn the power off at the circuit breaker.
2. Mount the load controller to the junction box using the included locknut.

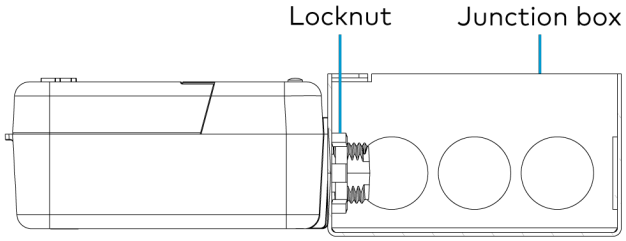

3. Wire the load controller as shown in the following diagrams.

Zūm Net Load Controller Wiring to Other Zūm Net and Zūm Link Devices

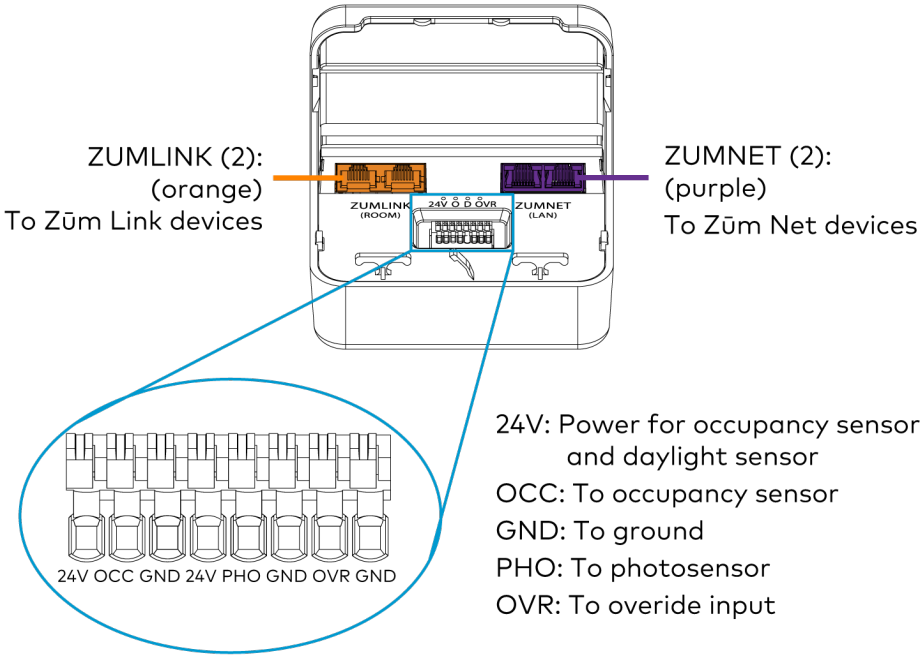

ZUMNET-JBOX-DALI Wiring

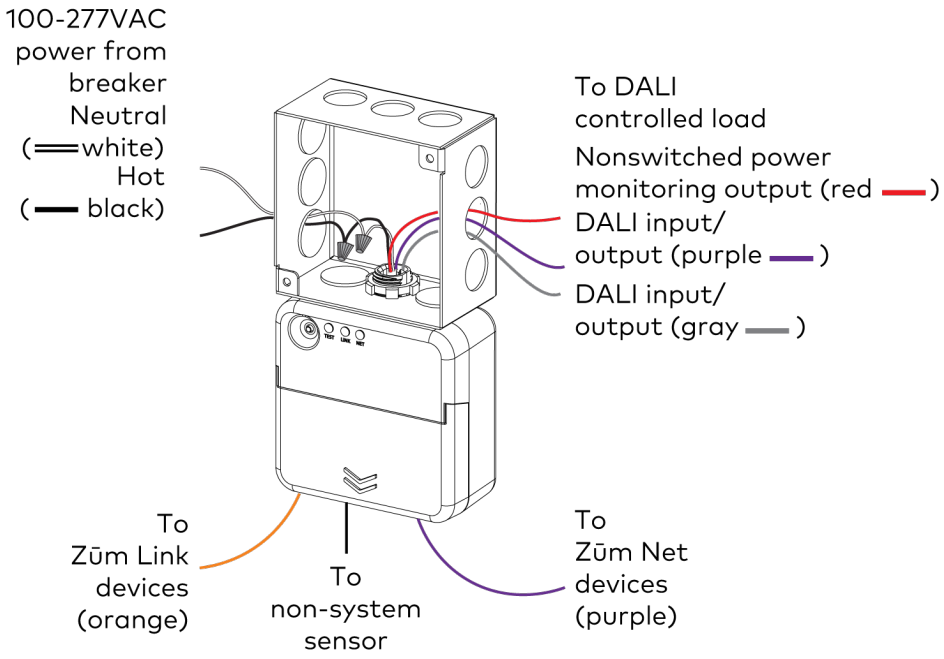

ZUMNET-JBOX-DALI Wiring to Meet Chicago Electric Code

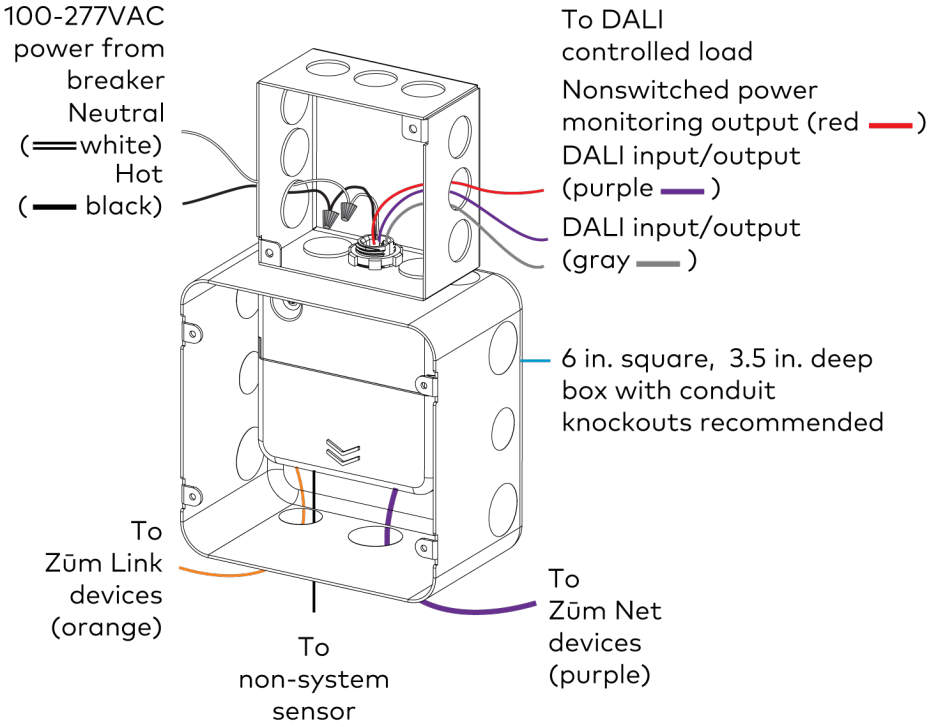

ZUMNET-JBOX-16A-LV Wiring

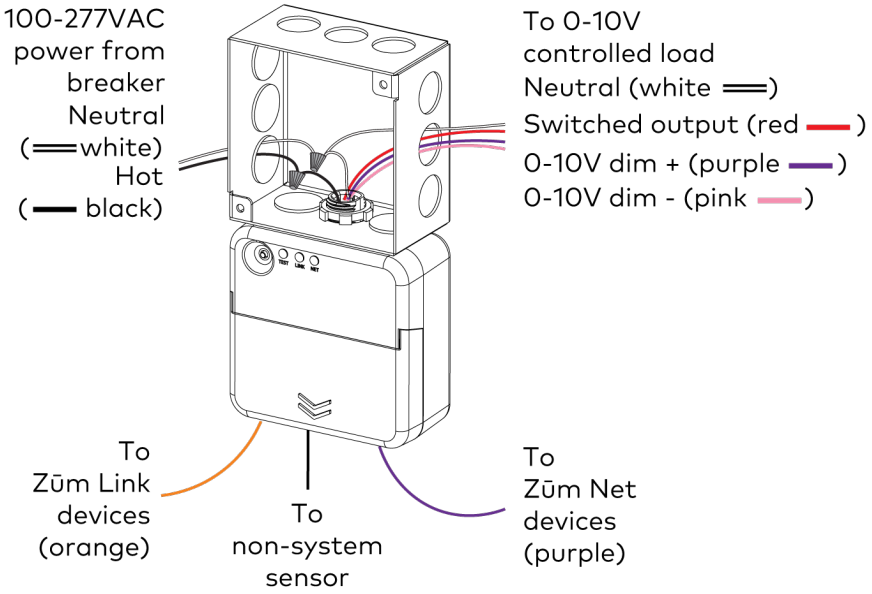

ZUMNET-JBOX-16A-LV Wiring to Meet Chicago Electric Code

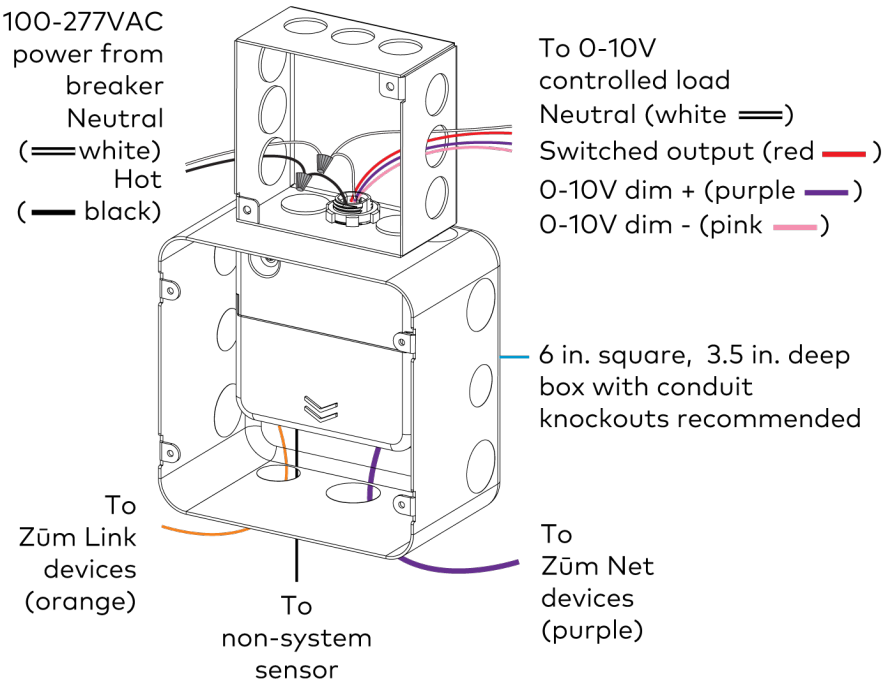

Zūm Link Load Controller Wiring to Other Zūm Link Devices

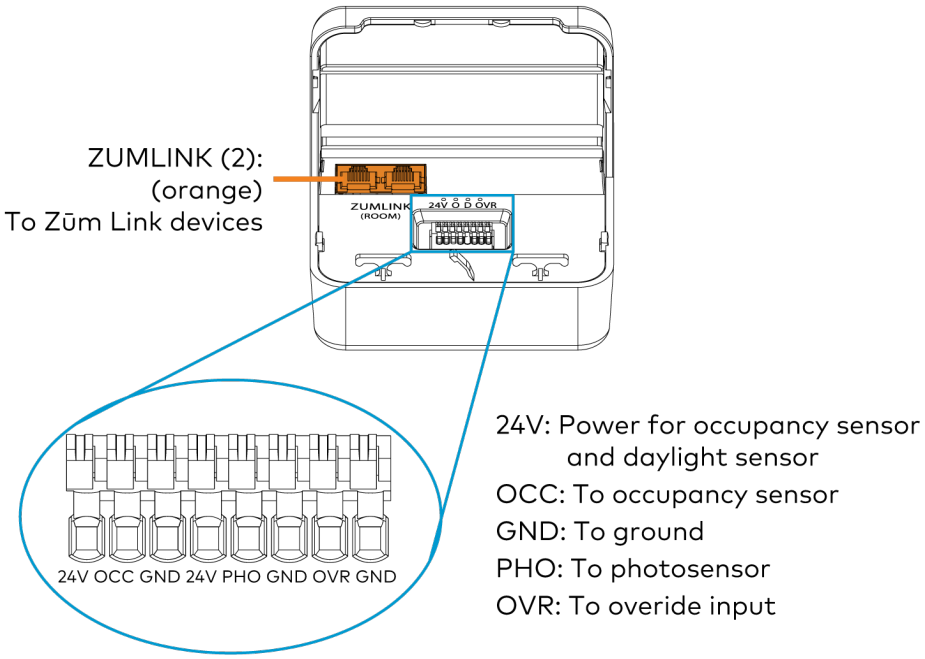

ZUMLINK-JBOX-16A-LV Wiring

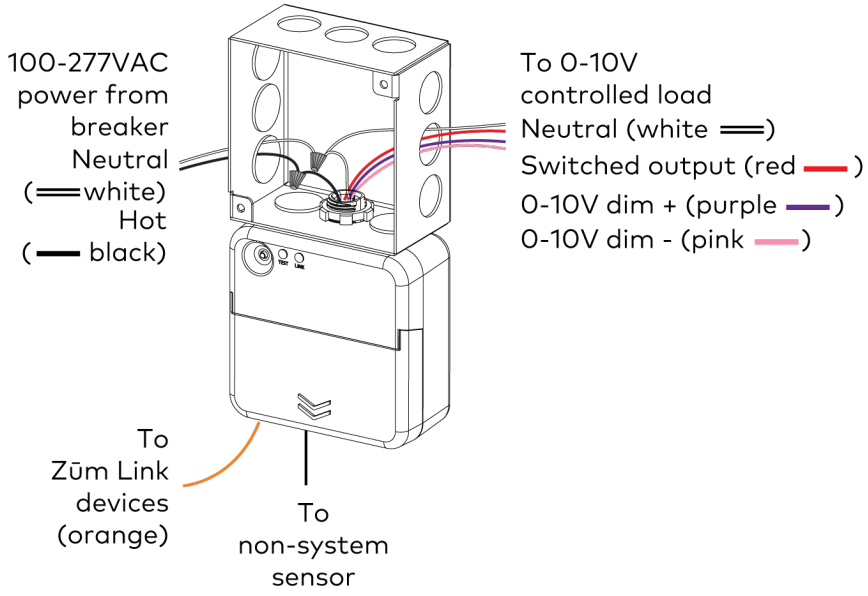

ZUMLINK-JBOX-16A-LV Wiring to Meet Chicago Electric Code

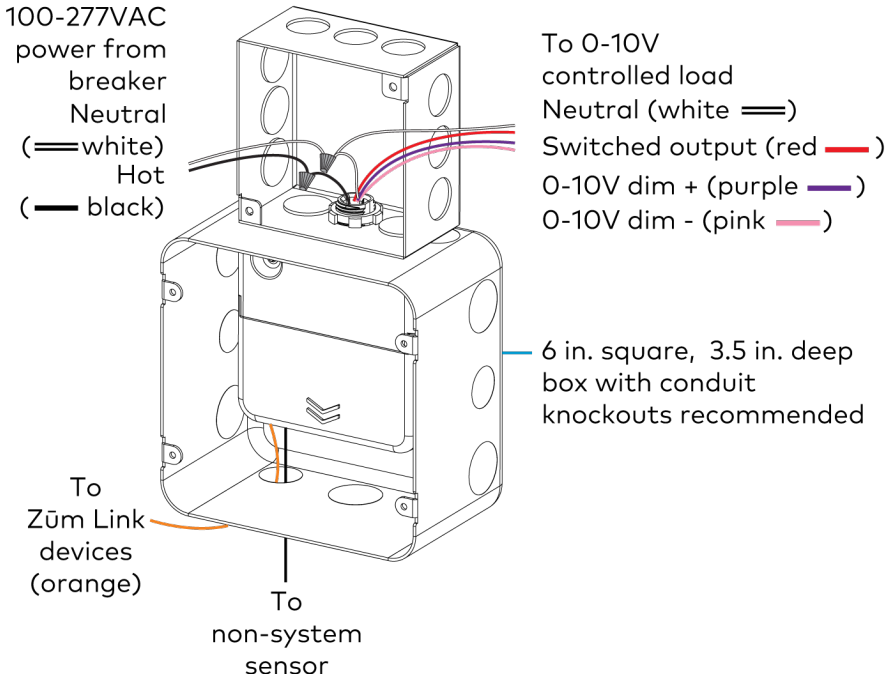

ZUMLINK-JBOX-20A-PLUG and ZUMLINK-JBOX-20A-SW Wiring

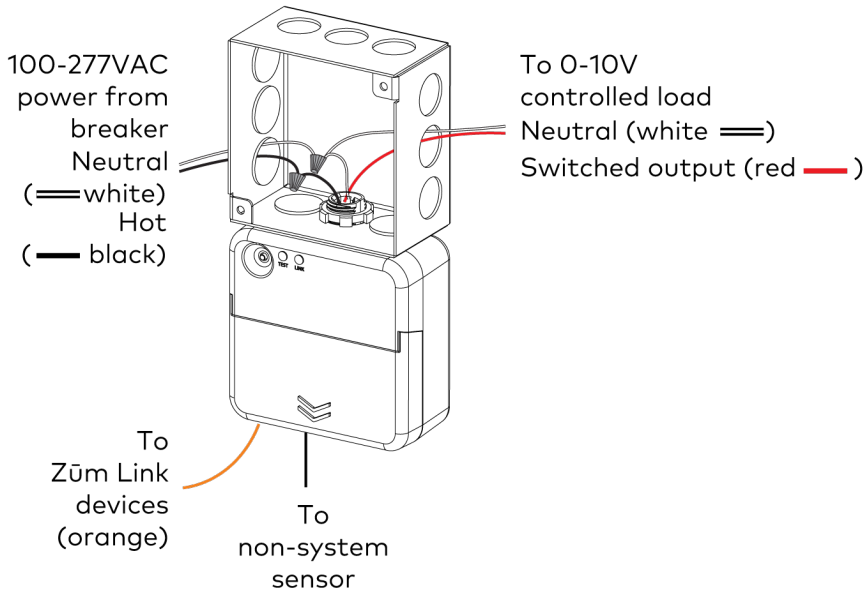

ZUMLINK-JBOX-20A-PLUG and ZUMLINK-JBOX-20A-SW Wiring to Meet Chicago Electric Code

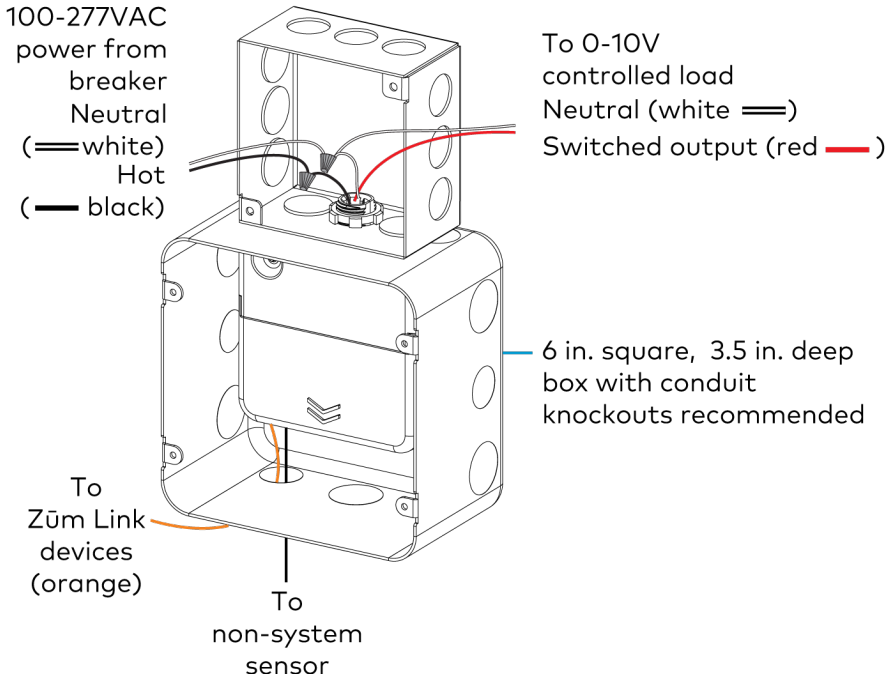

Zūm Wired System Diagram

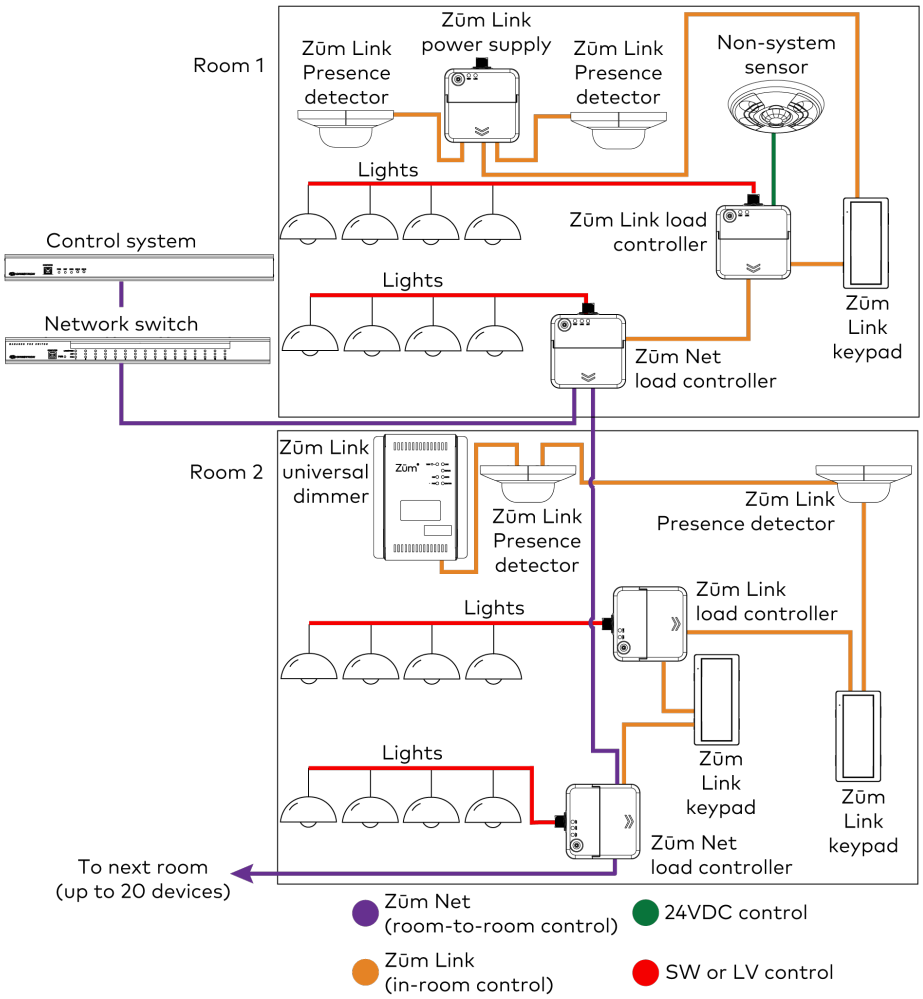

NOTES:

- Daisy-chain up to 20 Zūm Net devices (up to 328 ft (100 m) between Zūm Net devices) with purple CBL-CAT5E-ZUMNET-P RJ-45 cables (sold separately).
- Do not exceed three network switches between a ZUM-HUB4 and a Zūm Net device.
- System sensors communicate digitally via Zūm Link. Non-system sensors communicate via an analog connection on a Zūm Wired load controller.

Test the Loads

To verify system wiring, test the loads. Tap the **TEST** button to turn the connected loads on and off. Press and hold the **TEST** button to cycle the connected dimmers.

Zūm Link Load Controllers

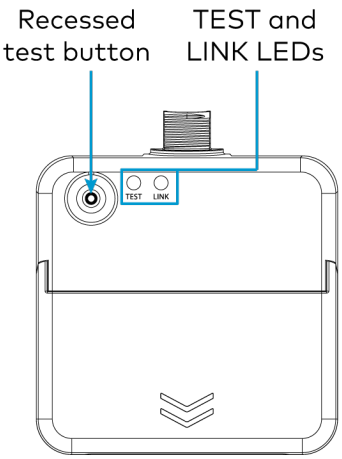

Zūm Net Load Controllers

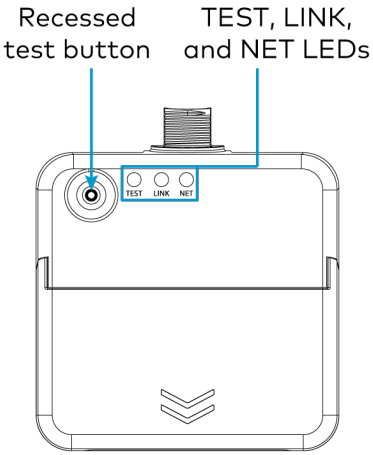

For more information, refer to the following topics:

- Load Controller Operation on page 149
- Zūm App Configuration on page 159

Universal Dimmer Load Controller Installation

The ZUMLINK-EXP-16A-DIMU is a single-channel universal dimmer and load controller designed to control a wide range of dimmable lighting load types. Using proprietary zero-cross filter technology, the ZUMLINK-EXP-16A-DIMU provides superior immunity to power line noise, resulting in significant reduction of lamp flicker.

Energy-saving options, such as Zūm link presence detectors or analog photosensors (sold separately) are available to enable daylighting, occupancy or vacancy sensing, integration, and centralized monitoring and management.

In the Box

Qty.	Description
1	ZUMLINK-EXP-16A-DIMU, Zūm® Wired Universal Dimmer Load Controller
	Additional Items
1	Bushing, Open/Closed, 0.94 in. ID x 1.23 in. OD, Black (2060645)

Important Safeguards

CAUTION: When using electrical equipment, basic safety precautions should always be followed:

- Read and follow all safety instructions.
- Do not mount near gas or electric heaters.
- Equipment should be mounted in locations and at heights where it will not readily be subjected to tampering by unauthorized personnel.
- The use of accessory equipment not recommended by the manufacturer may cause an unsafe condition.
- Save these instructions.

Install the Universal Dimmer Load Controller

Install the ZUMLINK-EXP-16A-DIMU on any vertical surface using four screws (not included). The screws must be appropriate for the mounting surface.

WARNINGS:

- To avoid fire, shock, or death, turn off the power at the circuit breaker or fuse and test that the power is off before wiring!
- Do **NOT** connect standard Ethernet ports on network-based devices to the orange Zūm Link ports on Zūm Link or Zūm Net devices. Also, do **NOT** connect the purple Zūm Net ports on Zūm Net devices to the orange Zūm Link ports on Zūm Link devices. These connections may damage network devices.

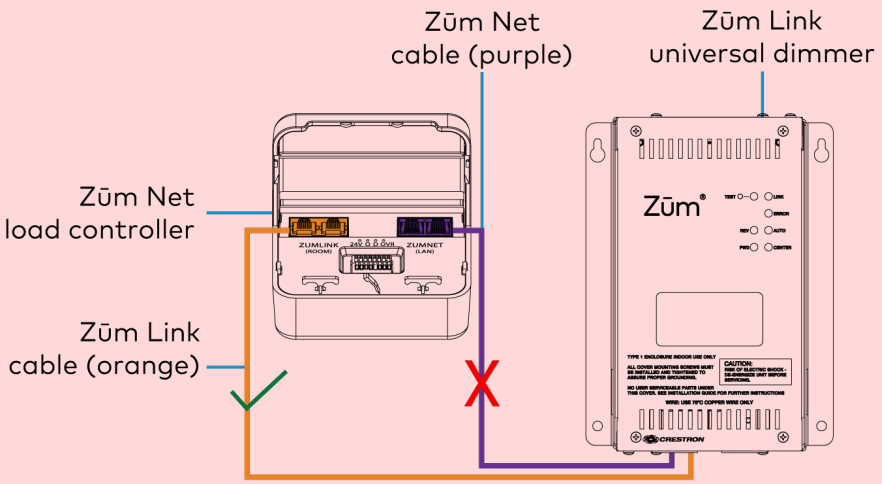

CAUTION: To prevent heat damage to drywall, secure a 1/2 in. (13 mm) thick piece of plywood to the wall and then secure the ZUMLINK-EXP-16A-DIMU to the plywood.

NOTES:

- Install and use this product in accordance with appropriate electrical codes and regulations.
- A licensed electrician must install this product.
- Use copper wire rated 75°C (167°F) or better.
- Suitable for damp locations
- For use where temperatures are between 32° to 104°F (0° to 40°C)

Wiring the Universal Dimmer Load Controller

WARNING: RISK OF SERIOUS PERSONAL INJURY. To avoid fire, shock, or death, turn off the power at the circuit breaker(s) or fuse and test that power is off before installing and wiring! Installing with power on can result in serious personal injury and damage to the device.

1. Turn the power off at the circuit breaker.
2. Insert the included bushing into the knockout hole to protect the low voltage wires.

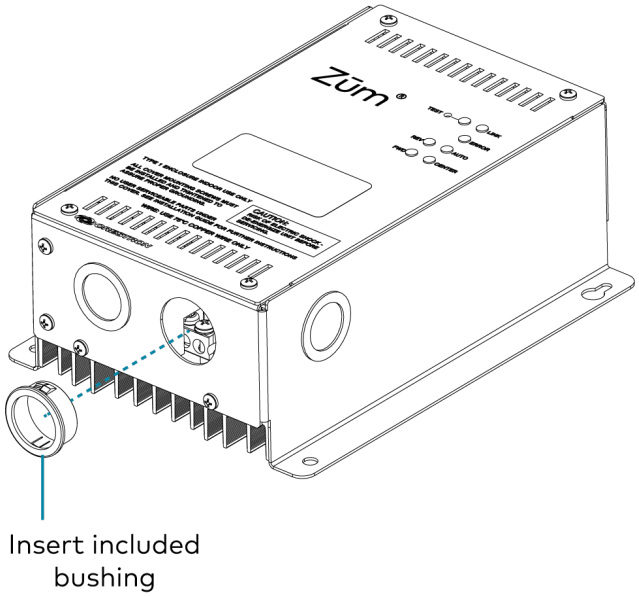

3. Use a #2 Phillips screwdriver to remove the cover screws and then remove the cover.

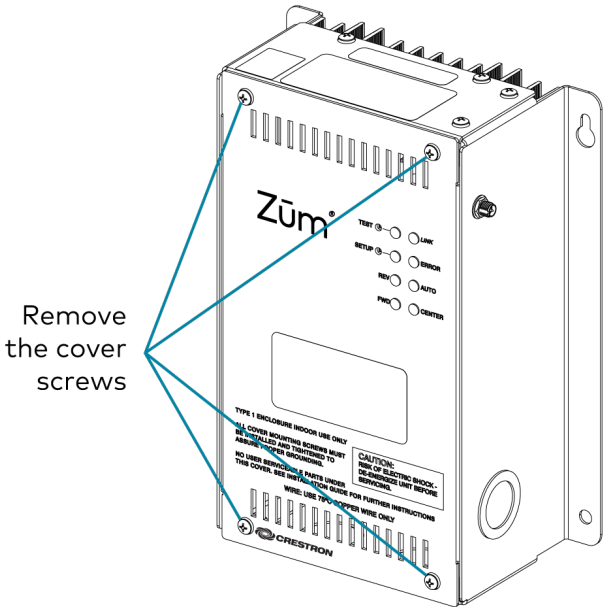

4. Wire the device as shown below. Additional LINE, NEUT, and GND connections are supplied for power pass-through. When making connections, consider the following:
    - Wires should be 24 to 10 AWG.
    - Strip wires to 5/16 in. (8 mm).
    - Tighten screw terminals to 4.5 in.-lbs (0.5 Nm).

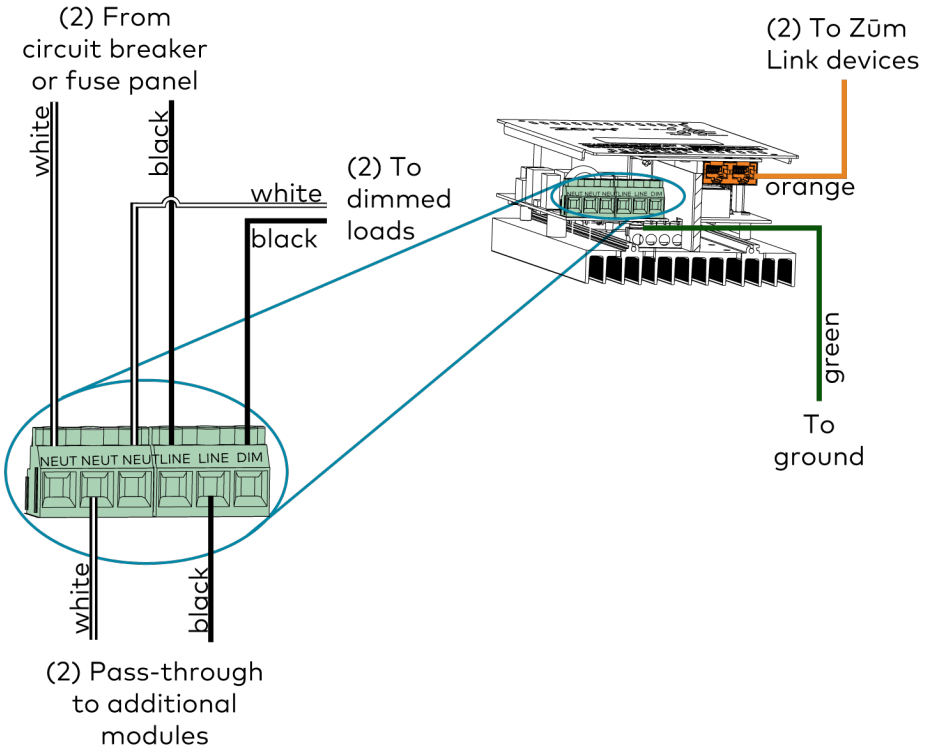

5. Connect the orange CBL-CAT5E-ZUMLINK-P (sold separately) to the ZUMLINK ports.

Zūm Wired System Diagram

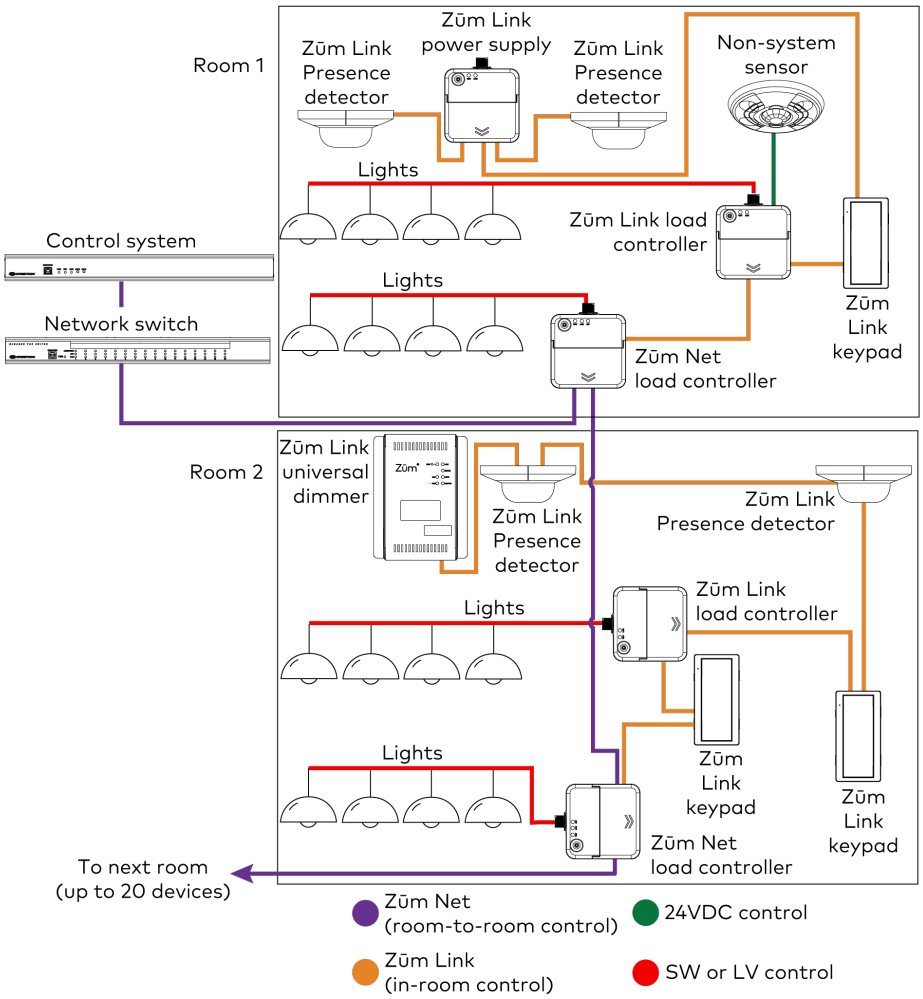

NOTES:

- Daisy-chain up to 20 Zūm Net devices (up to 328 ft (100 m) between Zūm Net devices) with purple CBL-CAT5E-ZUMNET-P RJ-45 cables (sold separately).
- Do not exceed three network switches between a ZUM-HUB4 and a Zūm Net device.
- System sensors communicate digitally via Zūm Link. Non-system sensors communicate via an analog connection on a Zūm Wired load controller.

For more information, refer to the following topics:

- Universal Dimmer Load Controller Operation on page 153
- Zūm App Configuration on page 159

Keypad Installation

The ZUMLINK-KP mounts to a standard electrical box. Rocker buttons/button trees and bezels are available in almond, black, gray, red, and white. The button trees also have options for blank buttons, standard pad printed labels, or custom engravings. A finished installation requires a decorator-style faceplate (FP-G series, sold separately).

In the Box

Qty.	Description
1	ZUMLINK-KP, Zūm® Wired Keypad with Link Communication, Rocker Button
	Additional Items
2	Screw, 6-32 x 3/4 in., Truss Head, Combo (2009211)

Install the Keypad

The ZUMLINK-KP comes preassembled with the white ZUMLINK-BTNR rocker button. If another rocker button or button tree is required, refer to Replace the Rocker Button/Button Tree and Bezel on page 116.

WARNINGS:

- To avoid fire, shock, or death, turn off the power at the circuit breaker or fuse and test that the power is off before wiring!
- Do **NOT** connect standard Ethernet ports on network-based devices to the orange Zūm Link ports on Zūm Link or Zūm Net devices. Also, do **NOT** connect the purple Zūm Net ports on Zūm Net devices to the orange Zūm Link ports on Zūm Link devices. These connections may damage network devices.

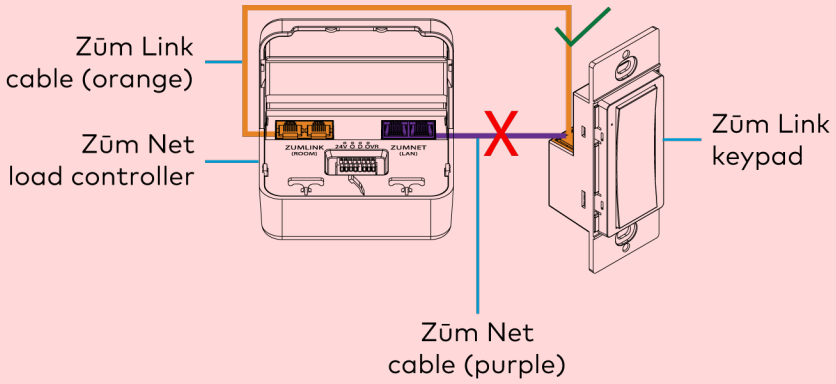

NOTES:

- Install and use this product in accordance with appropriate electrical codes and regulations.
- A licensed electrician should install this product.
- Ensure that the system power is off until the keypad is fully installed.
- For use where temperatures are between 32° to 104°F (0° to 40°C)
- Several keypads may be installed in one electrical box (multigang). For a smooth appearance, install one-piece multigang faceplates (not included).

Wire the Keypad

Use orange CBL-CAT5E-ZUMLINK-P cables (sold separately) to wire in-room Zūm wired devices, such as load controllers, to the ZUMLINK-KP.

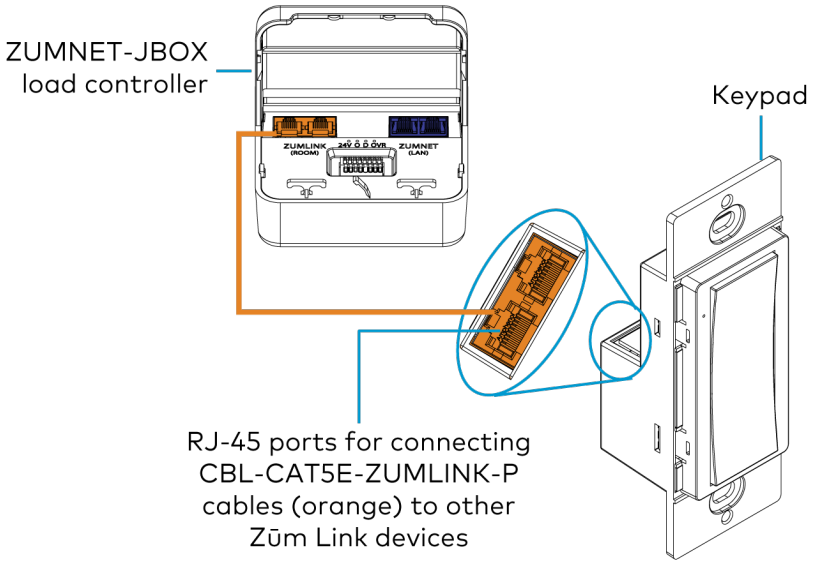

Zūm Wired System Diagram

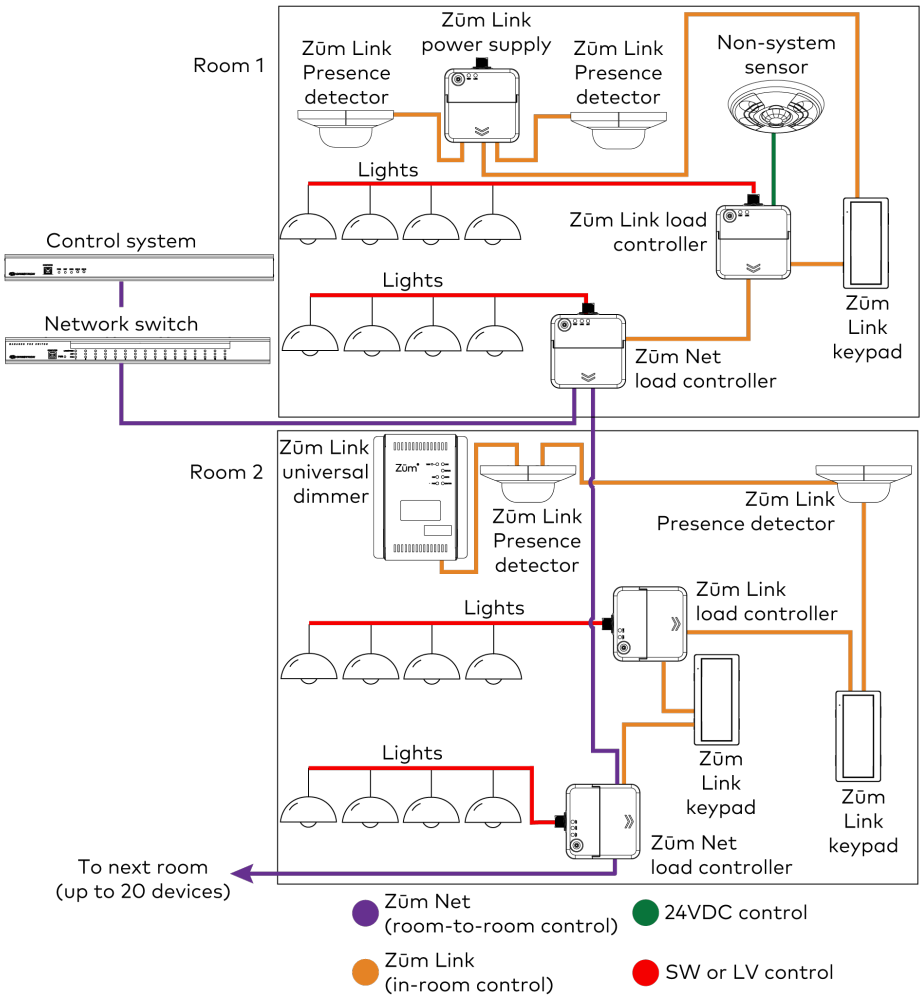

NOTES:

- Daisy-chain up to 20 Zūm Net devices (up to 328 ft (100 m) between Zūm Net devices) with purple CBL-CAT5E-ZUMNET-P RJ-45 cables (sold separately).
- Do not exceed three network switches between a ZUM-HUB4 and a Zūm Net device.
- System sensors communicate digitally via Zūm Link. Non-system sensors communicate via an analog connection on a Zūm Wired load controller.

Mount the Keypad

The ZUMLINK-KP mounts to into a standard 1-gang electrical box.

NOTE: Turn the system power off before making connections. Do not turn the system power on until the device is fully installed in the mounting surface.

1. Holding the keypad with the LED on the left, place it in the electrical box.
2. Secure the keypad using the included #6-32 x 3/4 in. truss screws.

> **CAUTION:** Excess wire pinched between the keypad and electrical box could short out. Make sure all excess wire is completely inside the electrical box and not between the box and the keypad.

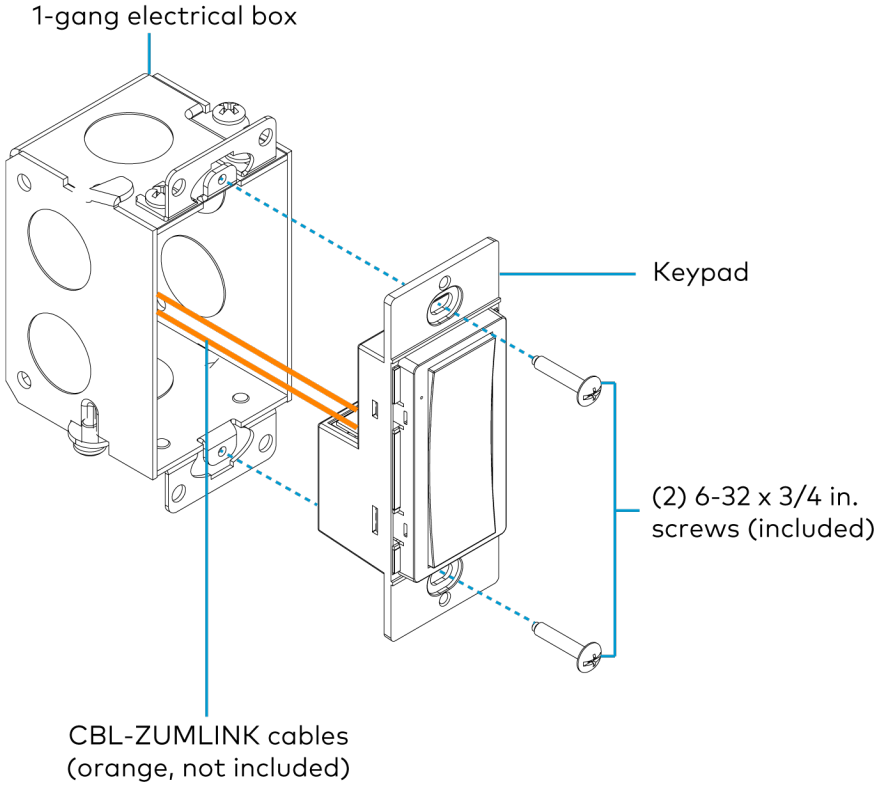

3. Attach the desired decorator-style faceplate (not included).
4. Turn the system power on.

Replace the Rocker Button/Button Tree and Bezel

The ZUMLINK-KP comes preassembled with the ZUMLINK-BTNR rocker button. Follow the procedure below to replace the bezel and rocker button with a new bezel and rocker button/button tree.

1. Remove the faceplate from the keypad.
   If a Crestron FP-G series faceplate (not included) is installed, remove only the cover.
2. Use a flat-head screwdriver to remove the bezel and rocker button by pressing the screwdriver into the notches on the side of the keypad.
   The bezel and rocker button release from the keypad.

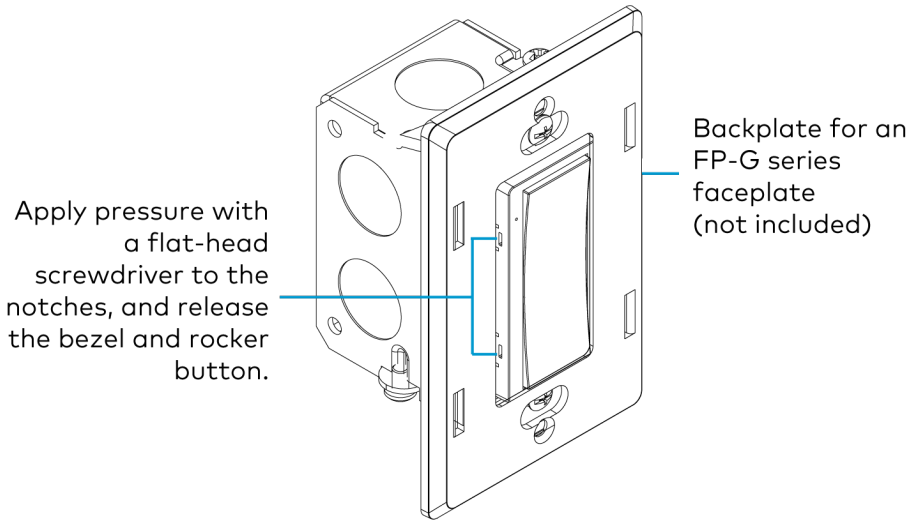

3. Position the replacement rocker button/button tree on the keypad.

4. Place the replacement bezel on top of the rocker button/button tree, making sure to align the LED hole with the LED on the keypad, and snap the bezel into place.

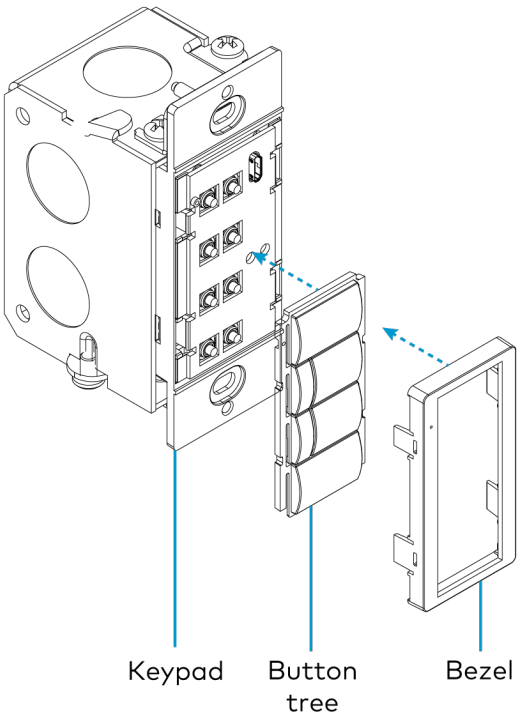

For more information, refer to the following topics:

- Keypad Operation on page 156
- Zūm App Configuration on page 159

Presence Detectors Installation

The presence detectors can be mounted to a junction box (not included) or directly to a ceiling. Before mounting, make sure the backplate is separated from the presence detectors. Refer to Remove or Attach the Backplate on page 120.

Presence Detector with Daylight Sensing

- ZUMLINK-IR-QUATTRO-DLS with passive infrared technology
- ZUMLINK-DT-QUATTRO-DLS with passive infrared and ultrasonic technology
- ZUMLINK-US-QUATTRO-DLS with ultrasonic technology
- ZUMLINK-IR-QUATTRO-HD-DLS with high-definition, passive infrared technology
- ZUMLINK-US-HALLWAY-DLS with ultrasonic technology and bidirectional detection for hallways
- ZUMLINK-US-ONEWAY-DLS with ultrasonic technology and unidirectional detection for hallways

Presence Detector with Daylight Sensing and Output Relay

- ZUMLINK-IR-QUATTRO-DLS-RLY with passive infrared technology
- ZUMLINK-DT-QUATTRO-DLS-RLY with passive infrared and ultrasonic technology
- ZUMLINK-US-QUATTRO-DLS-RLY with ultrasonic technology
- ZUMLINK-IR-QUATTRO-HD-DLS-RLY with high-definition, passive infrared technology
- ZUMLINK-US-HALLWAY-DLS-RLY with ultrasonic technology and bidirectional detection for hallways
- ZUMLINK-US-ONEWAY-DLS-RLY with ultrasonic technology and unidirectional detection for hallways

WARNINGS:

- To avoid fire, shock, or death, turn off the power at the circuit breaker or fuse and test that the power is off before wiring!
- Do **NOT** connect standard Ethernet ports on network-based devices to the orange Zūm Link ports on Zūm Link or Zūm Net devices. Also, do **NOT** connect the purple Zūm Net ports on Zūm Net devices to the orange Zūm Link ports on Zūm Link devices. These connections may damage network devices.

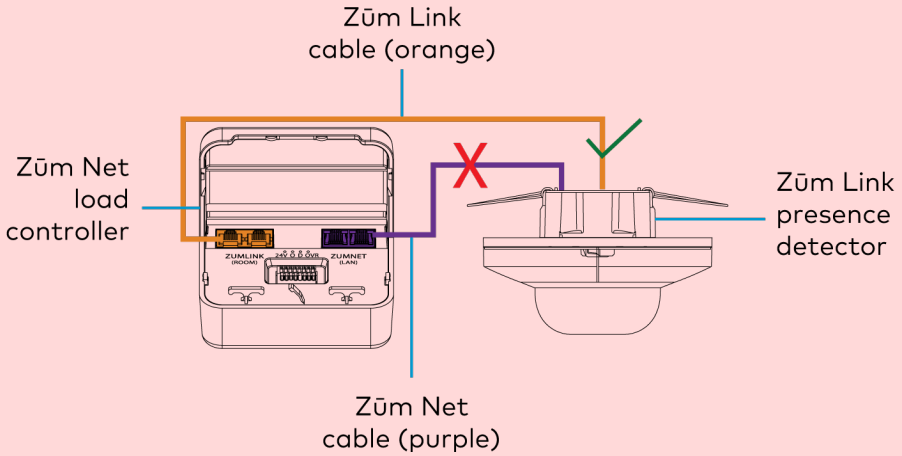

NOTES:

- Install and use this product in accordance with appropriate electrical codes and regulations.
- A licensed electrician should install this product.

In the Box

Qty.	Description
1	Zūm Wired Presence Detectors with Link Communication

Remove or Attach the Backplate

To remove the backplate from the presence detector:

1. Locate the two sliding tabs on opposite sides of the presence detector.
2. Extend the sliding tabs out of the housing. A flat-head screwdriver can be used.

   Once both sliding tabs are exposed, the presence detector releases from the backplate.

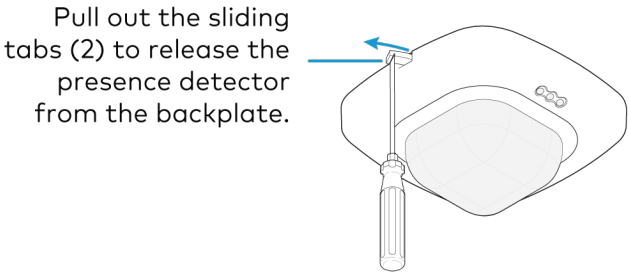

To attach the backplate to the presence detector:

1. Ensure the sliding tabs are extended out of the housing.
2. Align the pins on the back of the presence detector with the socket on the backplate and press.

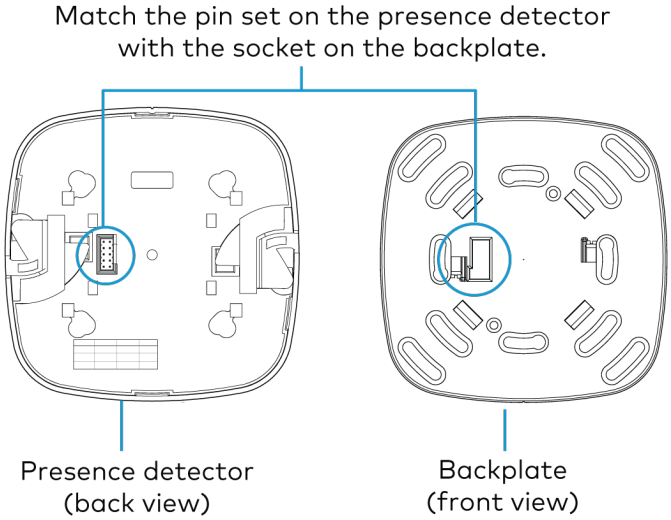

3. Push both sliding tabs back into the housing

Junction Box Mounting

The presence detectors are compatible with 4 in. square junction boxes, 4 in. round junction boxes, and 3 in. mud rings (not included). After the junction box is installed, follow the procedure for mounting the presence detectors.

1. Install the junction box according to its requirements.
2. Remove the backplate from the presence detector. Refer to Remove or Attach the Backplate on page 120.

3. Remove both spring tabs from the backplate. Use your fingers or needle-nose pliers.
    a. Pinch one spring tab to minimize it's width.
    b. Carefully lift the spring out of the housing.
    c. Repeat the process with the other spring tab.
    d. Discard the spring tabs.

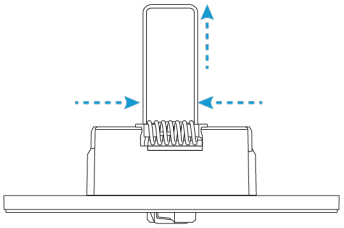

4. Feed the CBL-CAT5E-ZUMLINK-P cable through the junction box or mud ring, and connect it to the Zūm Link Presence Detectors backplate.

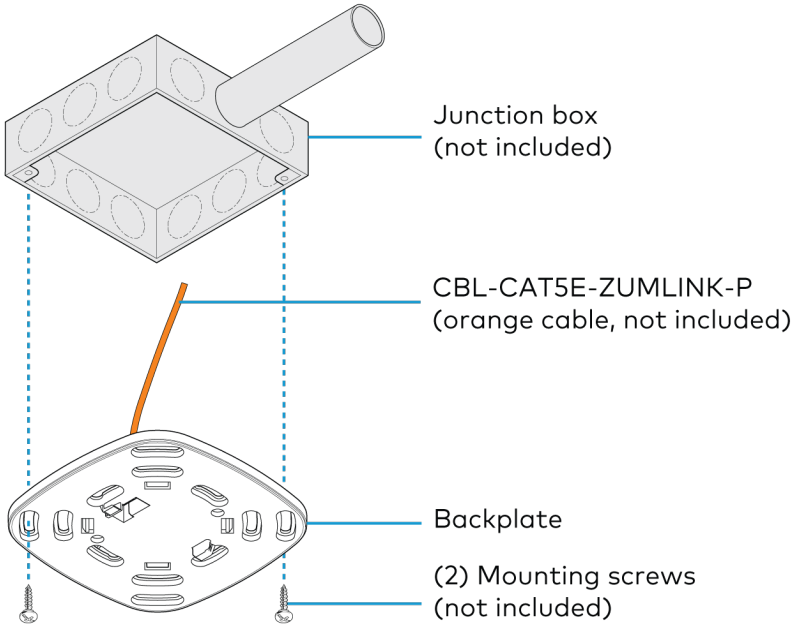

For presence detectors with additional output relays, connect the relays to a relay-input capable device before mounting the backplate to the junction box or mud ring.

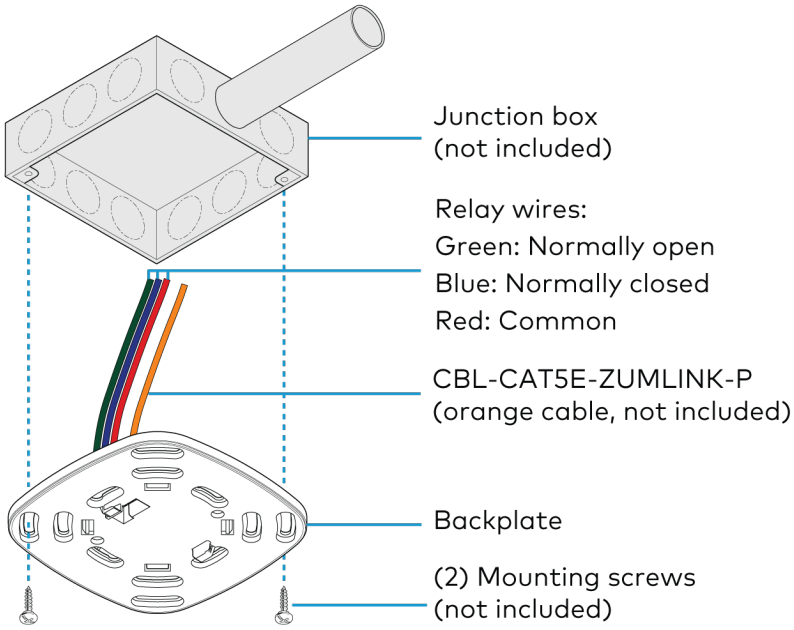

Relay connection applicable for the following presence detectors:

- ZUMLINK-IR-QUATTRO-DLS-RLY
- ZUMLINK-DT-QUATTRO-DLS-RLY
- ZUMLINK-US-QUATTRO-DLS-RLY

- ZUMLINK-IR-QUATTRO-HD-DLS-RLY
- ZUMLINK-US-HALLWAY-DLS-RLY
- ZUMLINK-US-ONEWAY-DLS-RLY

5. Using two mounting screws (not included), attach the back plate to the electrical box or mud ring.
6. Attach the presence detector to the backplate. Refer to Remove or Attach the Backplate on page 120.

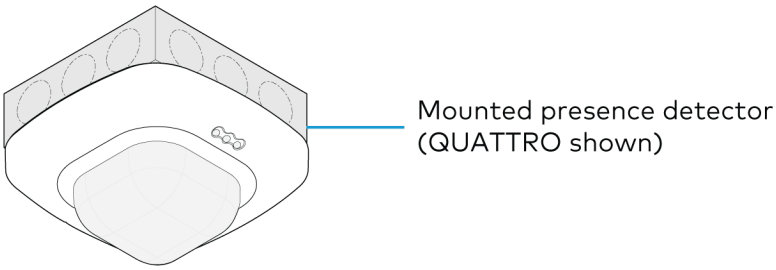

7. Wire the presence detector according to the Zūm Wired System Diagram on page 125

Ceiling Mounting

A mounting hole 2.69 in. (68 mm) to 3 in. (76 mm) in diameter must be cut before mounting the presence detector to the ceiling.

1. Cut a mounting hole that is 2.69 in. (68 mm) to 3 in. (76 mm) in diameter.

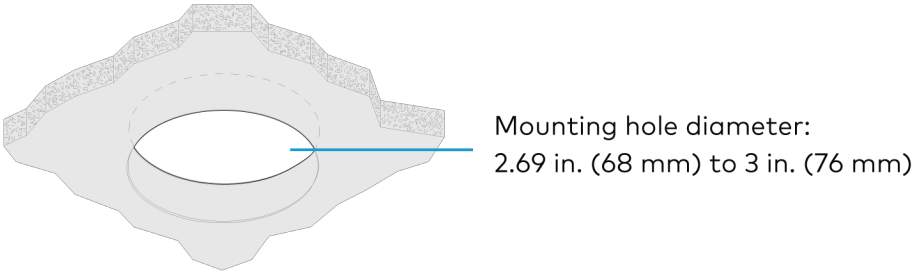

2. Feed the CBL-CAT5E-ZUMLINK-P cable through the mounting hole, and connect it to the Zūm Link Presence Detectors backplate.

   For presence detectors with additional output relays, connect the relays to a relay-input capable device before mounting the backplate to the mounting hole.

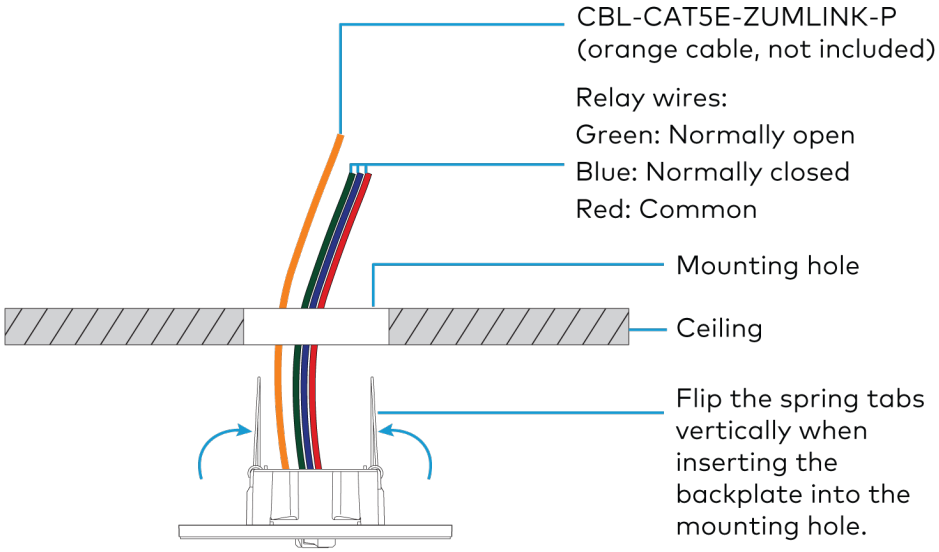

   Relay connection applicable for the following presence detectors:

   - ZUMLINK-IR-QUATTRO-DLS-RLY
   - ZUMLINK-DT-QUATTRO-DLS-RLY
   - ZUMLINK-US-QUATTRO-DLS-RLY
   - ZUMLINK-IR-QUATTRO-HD-DLS-RLY
   - ZUMLINK-US-HALLWAY-DLS-RLY
   - ZUMLINK-US-ONEWAY-DLS-RLY

3. Flip the backplate spring tabs to the vertical position and insert them into the mounting hole.

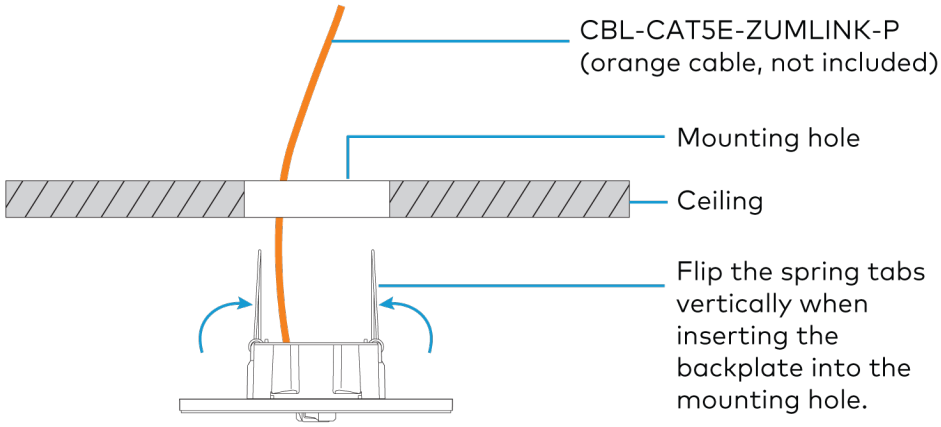

When the spring tabs release, they snap back down to secure the backplate to the ceiling.

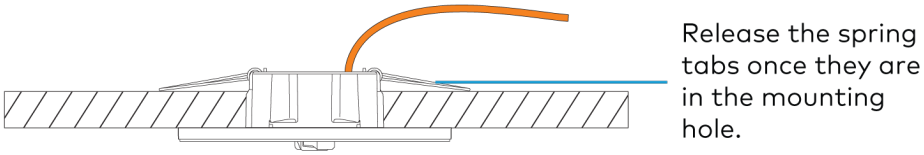

4. Attach the presence detector to the backplate. Refer to Remove or Attach the Backplate on page 120.

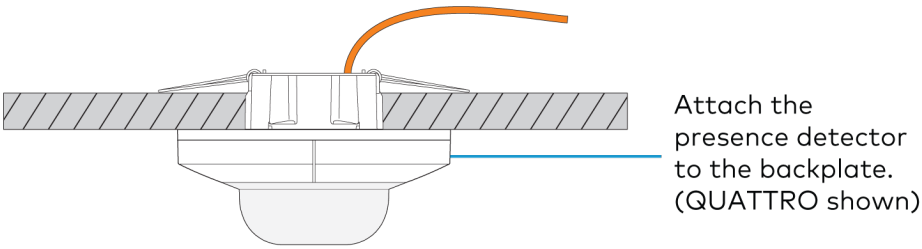

5. Wire the presence detector according to the Zūm Wired System Diagram on page 125

Zūm Wired System Diagram

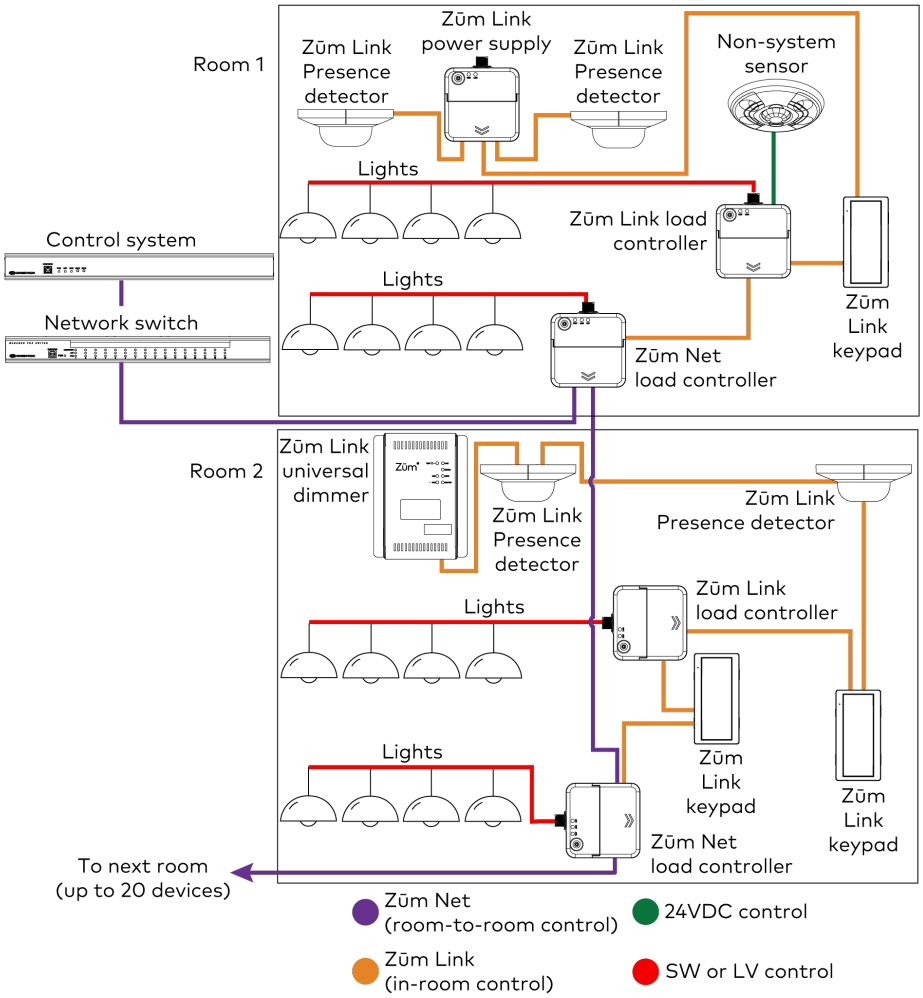

NOTES:

- Daisy-chain up to 20 Zūm Net devices (up to 328 ft (100 m) between Zūm Net devices) with purple CBL-CAT5E-ZUMNET-P RJ-45 cables (sold separately).
- Do not exceed three network switches between a ZUM-HUB4 and a Zūm Net device.
- System sensors communicate digitally via Zūm Link. Non-system sensors communicate via an analog connection on a Zūm Wired load controller.

For more information, refer to the following topics:

- Presence Detectors Operation on page 157
- Zūm App Configuration on page 159

Beam Pattern Coverage

NOTE: Detection along the far edge of the detection range may be inconsistent.

ZUMLINK-IR-QUATTRO-HD-DLS/ ZUMLINK-IR-QUATTRO-HD-DLS-RLY

Top View

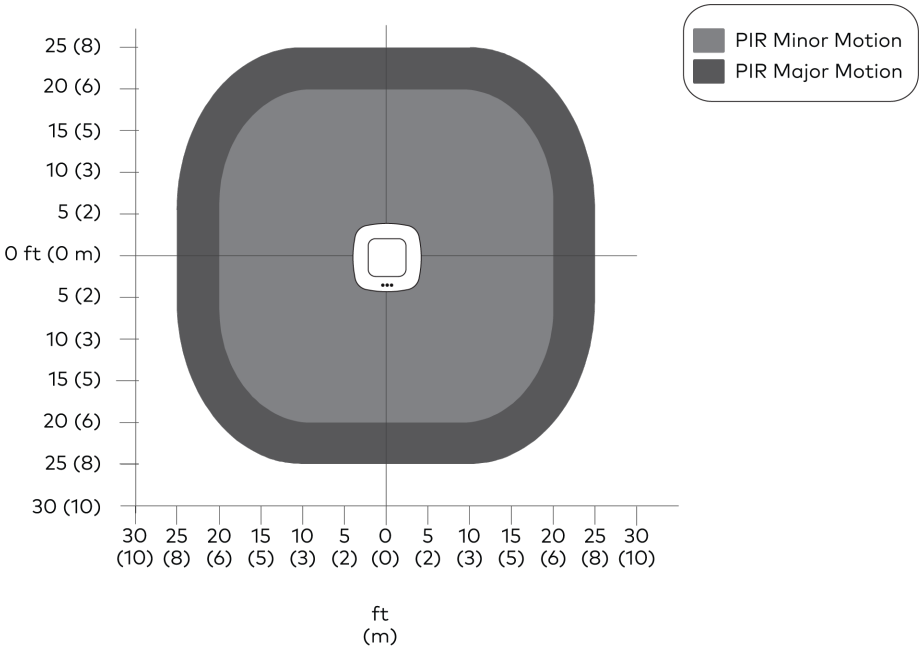

Side View

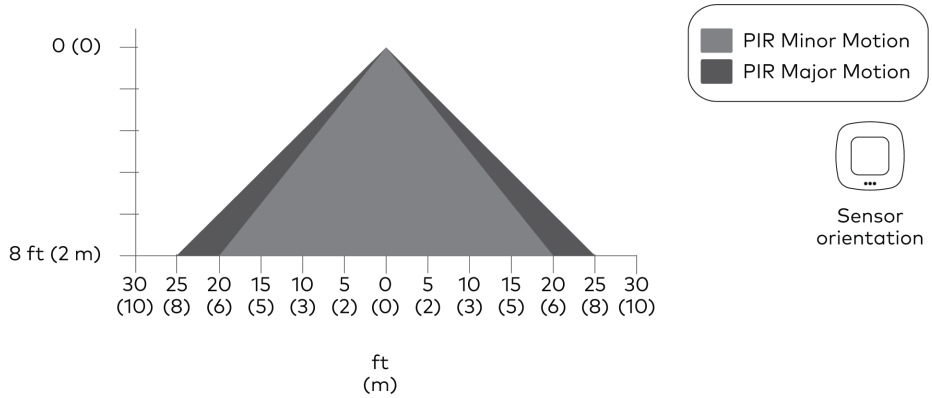

ZUMLINK-DT-QUATTRO-DLS/ ZUMLINK-DT-QUATTRO-DLS-RLY

Top View

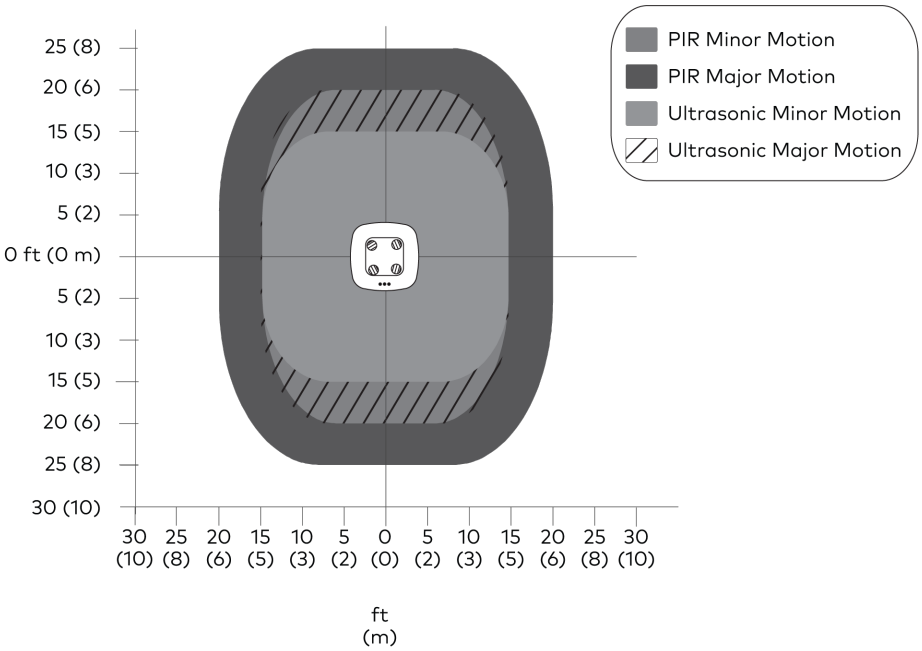

Side View Sensor Orientation A

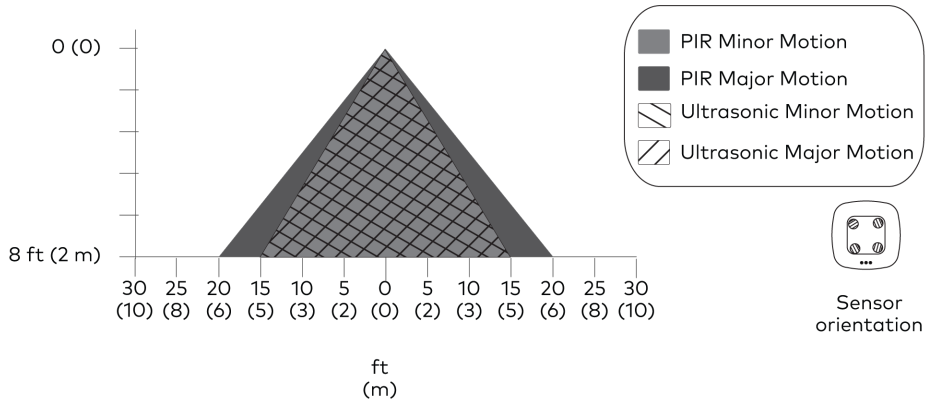

Side View Sensor Orientation B

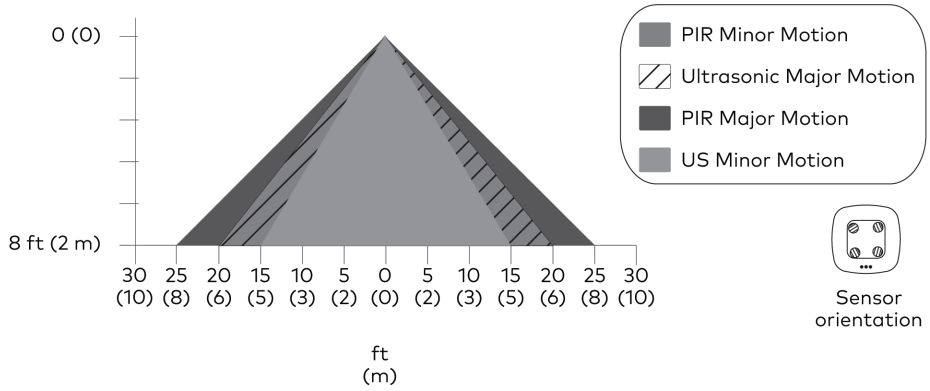

ZUMLINK-US-HALLWAY-DLS/ ZUMLINK-US-HALLWAY-DLS-RLY

Top View

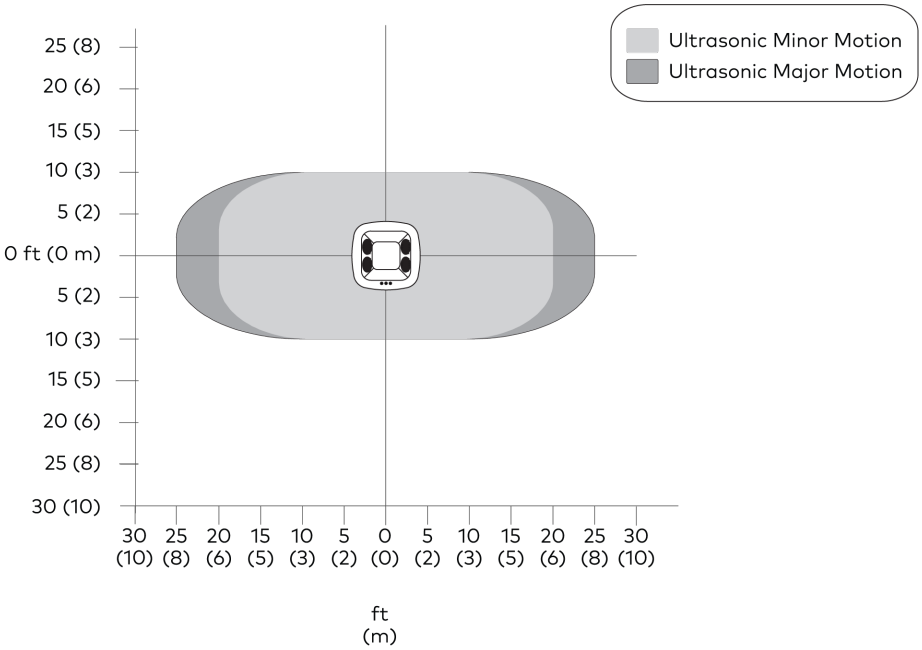

Side View Sensor Orientation A

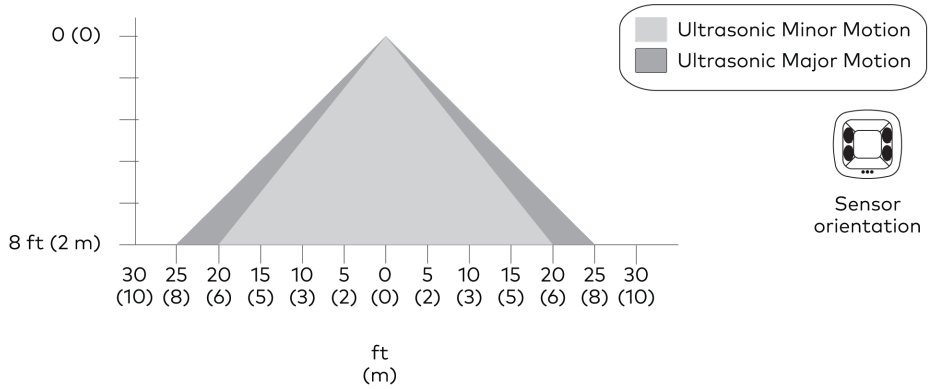

Side View Sensor Orientation B

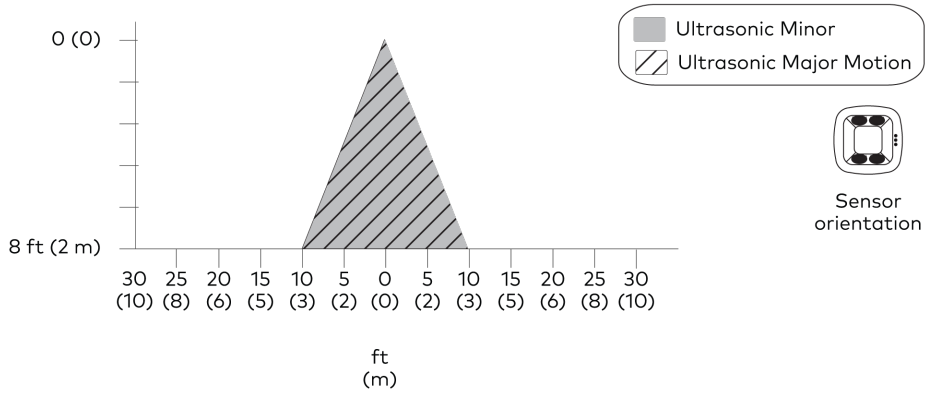

ZUMLINK-US-ONEWAY-DLS/ ZUMLINK-US-ONEWAY-DLS-RLY

Top View

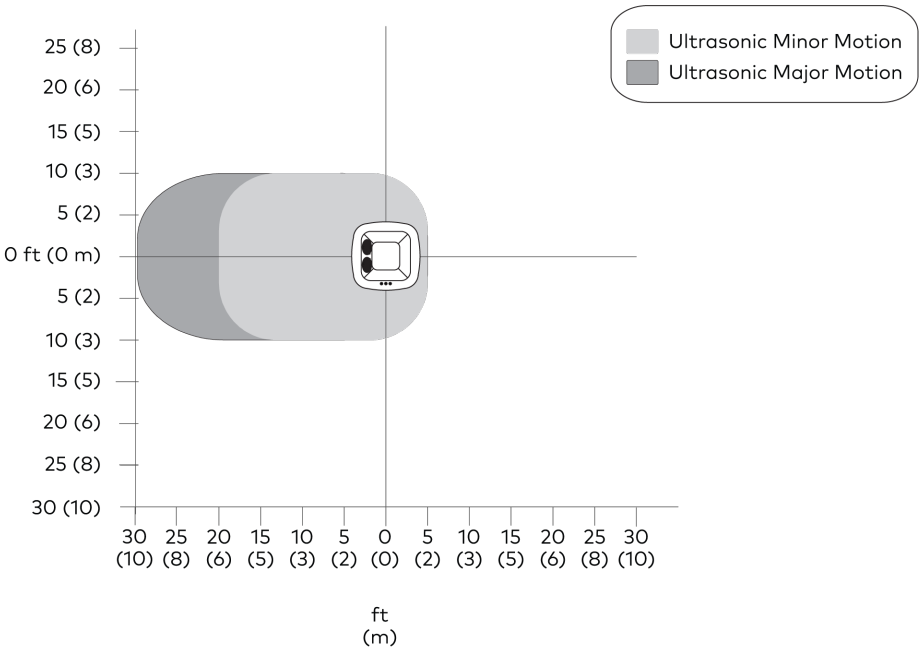

Side View Sensor Orientation A

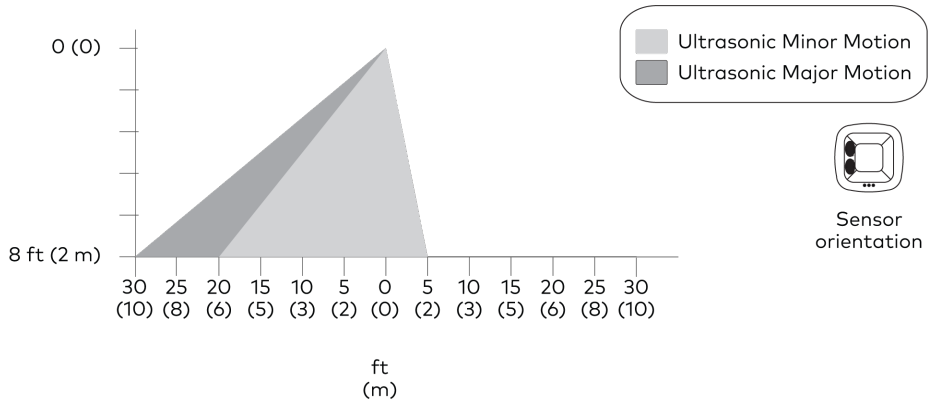

Side View Sensor Orientation B

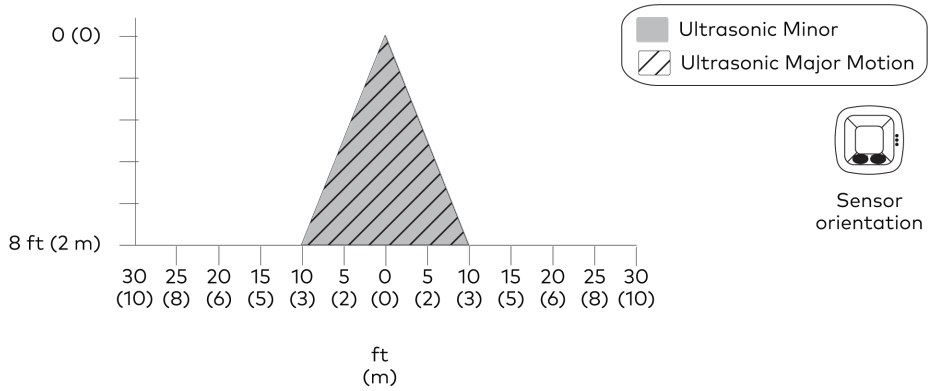

ZUMLINK-US-QUATTRO-DLS/ ZUMLINK-US-QUATTRO-DLS-RLY

Top View

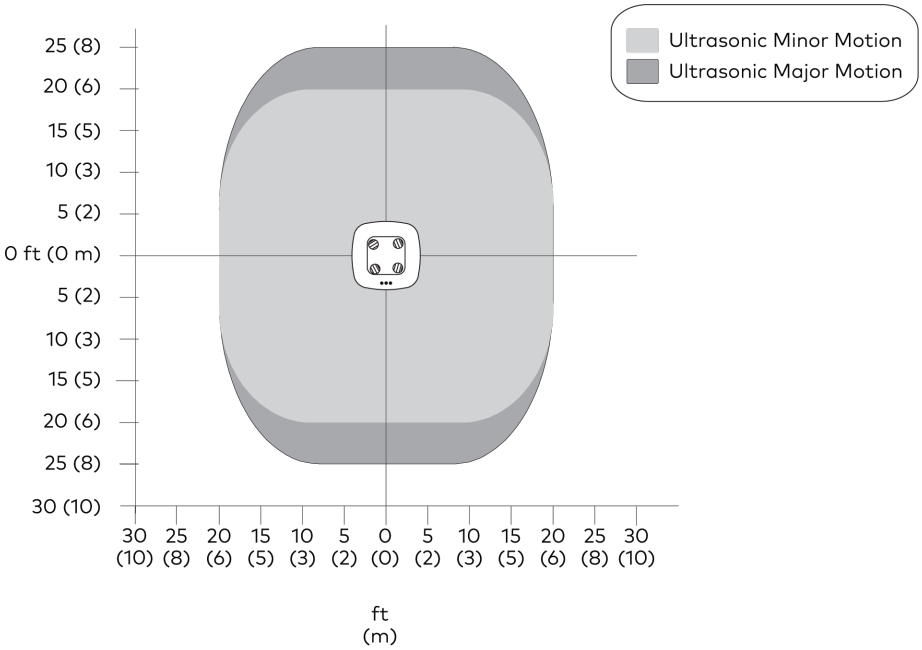

Side View Sensor Orientation A

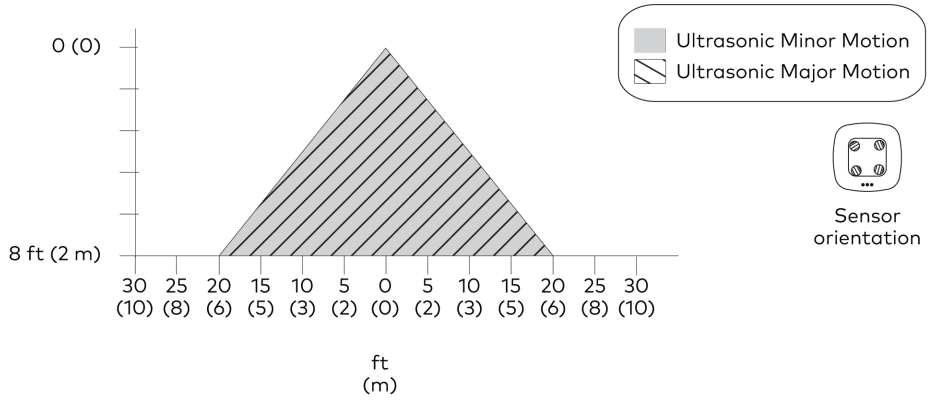

Side View Sensor Orientation B

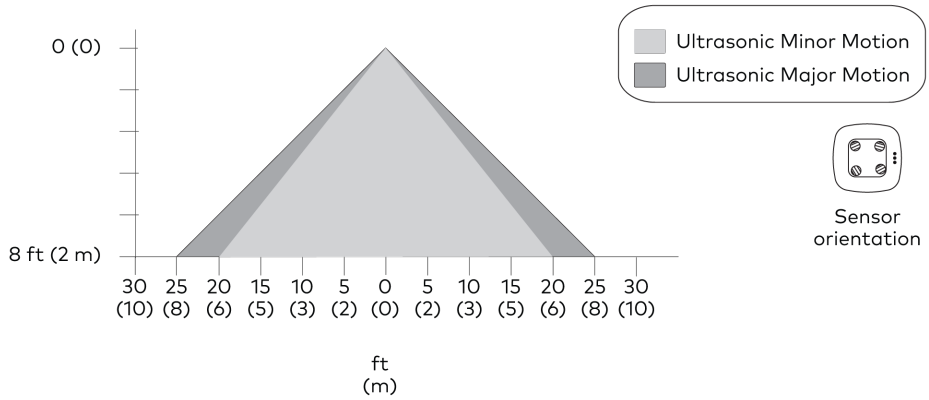

Hub Installation

Mount the ZUM-HUB4 and connect it to the network. The ZUM-HUB4 can be mounted into a rack or placed onto a flat surface.

In the Box

Qty.	Description
1	ZUM-HUB4, 4-Series® Control Processor for Zūm® Lighting Control System

	Additional Items
1	Connector, 4-Pin (2003576)
1	Power Pack, 24VDC, 2.5A, 100-240VAC (2045873)
2	Bracket, Rack Ear, 1U (2032122)
4	Foot, 0.5 in. x 0.5 in. x 0.23 in., Rubber, Black (2002389)
1	Power Cord, 5 ft 10 in. (1.78 m) (2042043)

Mount to a Rack

The hub occupies 1U of rack space.

To install the included rack ears:

1. Use a #1 or #2 Phillips screwdriver to remove the three screws from each side of the front of the device as shown in the following illustration.
2. Use the screwdriver and the screws removed in the previous step to attach the included rack ears to the device.

3. Mount the device into the rack using four mounting screws (not included).

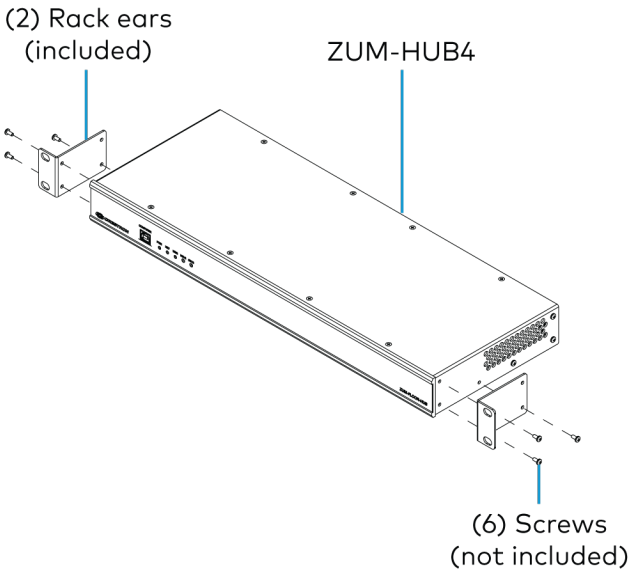

Place onto a Flat Surface

When placing the device onto a flat surface or stacking it with other equipment, attach the included rubber feet near the corners on the underside of the device.

Make Connections

The hub has a dedicated Control Subnet that is used for communication between the control system and Crestron Ethernet devices. This subnet allows for dedicated communication between the control system and Crestron Ethernet devices without interferences from other network traffic on the LAN.

Make the connections, and note the following:

- Use Crestron power supplies for Crestron equipment.
- The included cable(s) cannot be extended.
- Apply power after all connections have been made.

NOTES:

- Ensure the unit is properly grounded by connecting the chassis ground lug to an earth ground (building steel).
- The hub can be powered with the (included) 24VDC power pack.
- Do not connect the CONTROL SUBNET port to the LAN. The CONTROL SUBNET port must be connected only to Crestron Ethernet devices.

Connections

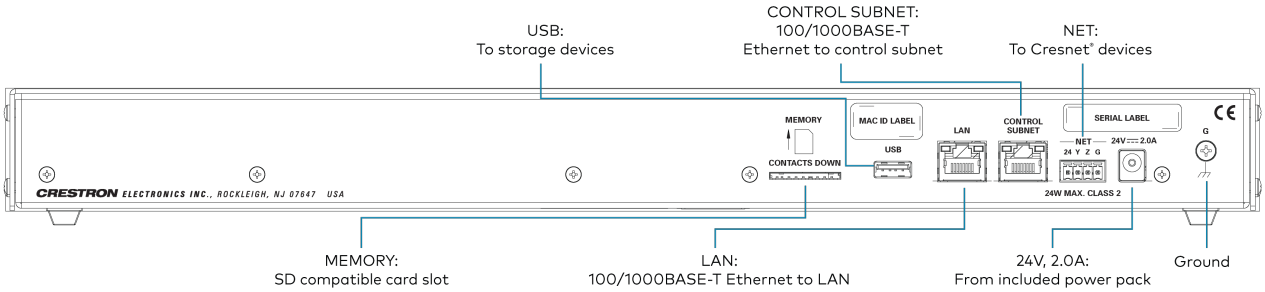

Zūm Wired System Diagram

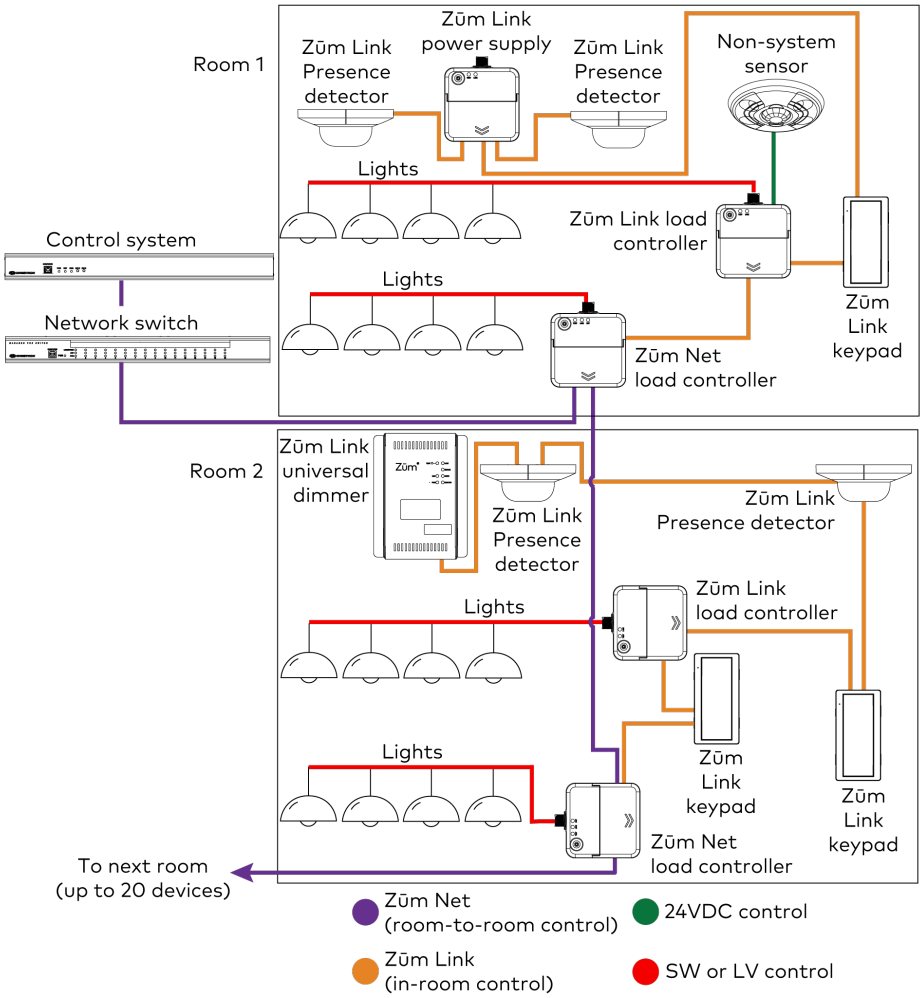

NOTES:

- Daisy-chain up to 20 Zūm Net devices (up to 328 ft (100 m) between Zūm Net devices) with purple CBL-CAT5E-ZUMNET-P RJ-45 cables (sold separately).
- Do not exceed three network switches between a ZUM-HUB4 and a Zūm Net device.
- System sensors communicate digitally via Zūm Link. Non-system sensors communicate via an analog connection on a Zūm Wired load controller.

To configure the hub, refer to Hub Web Interface on page 216 for details.

Power Supply Installation

The ZUMLINK-JBOX-PSU mounts directly to a 4 in. square junction box (sold separately) and connects to other Zūm Link devices via CBL-CAT5E-ZUMLINK-P cables (sold separately).

In the Box

Qty.	Description
1	ZUMLINK-JBOX-PSU, Zūm® Wired J-Box Power Supply

	Additional Items
5	Yellow Wire Nut, 22-10 AWG (2049245)
1	Locknut (2047626)
1	Tie Wrap (2005429)

Install the Power Supply

WARNINGS:

- To avoid fire, shock, or death, turn off the power at the circuit breaker or fuse and test that the power is off before wiring!
- Do **NOT** connect standard Ethernet ports on network-based devices to the orange Zūm Link ports on Zūm Link or Zūm Net devices. Also, do **NOT** connect the purple Zūm Net ports on Zūm Net devices to the orange Zūm Link ports on Zūm Link devices. These connections may damage network devices.

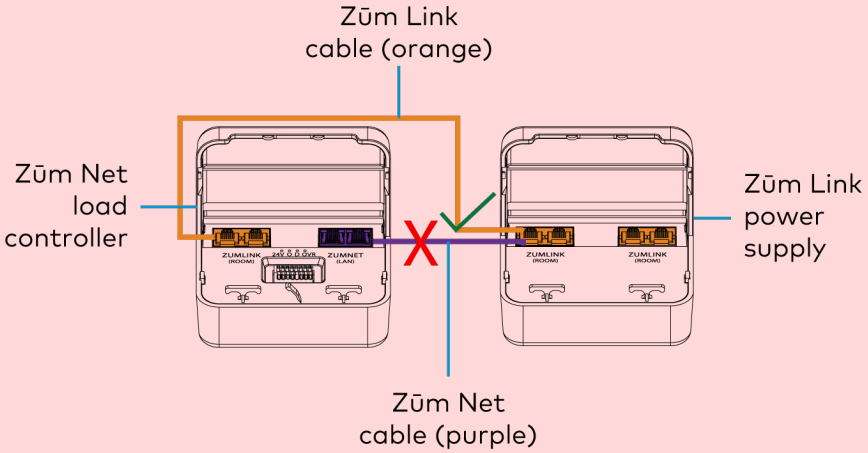

NOTES:

- Install and use this product in accordance with appropriate electrical codes and regulations.
- A licensed electrician must install this product.
- The product should project from the junction box when installed.
- For use where temperatures are between 32° to 104°F (0° to 40°C)
- For Chicago plenum compliant installations:
  - Ensure that the junction boxes and other electrical components are rated for Chicago plenum.
  - Separate the high-voltage lines from the low-voltage cables.
  - Install two junction boxes: one junction box for the high-voltage lines and one junction box for the low-voltage cables and load controller. A 6 in. square, 3.5 in. deep box with conduit knockouts is recommended for the low-voltage cables and load controller.

To install a power supply:

1. Turn the power off at the circuit breaker.
2. Mount the power supply to the junction box using the included locknut.

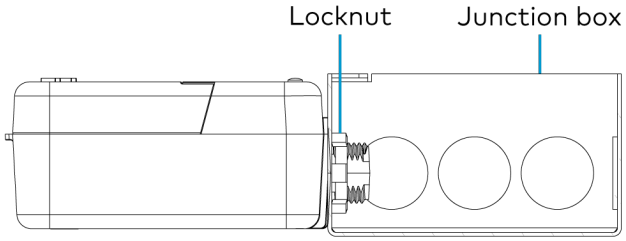

3. Wire the power supply as shown in the following diagrams.

ZUMLINK-JBOX-PSU Wiring to Other Zūm Link Devices

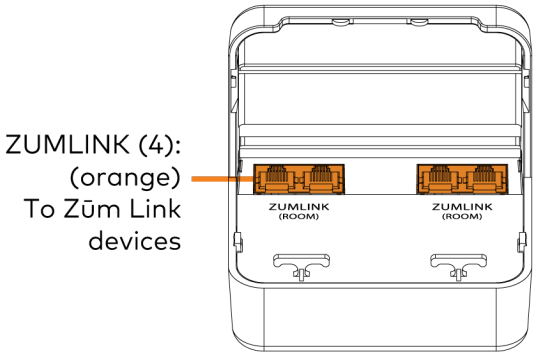

ZUMLINK-JBOX-PSU Wiring

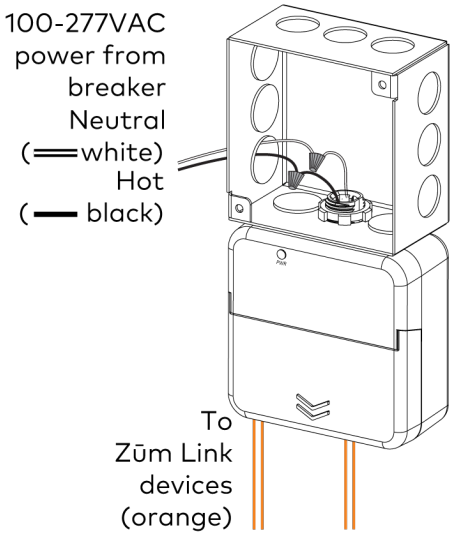

ZUMLINK-JBOX-PSU Wiring to Meet Chicago Electric Code

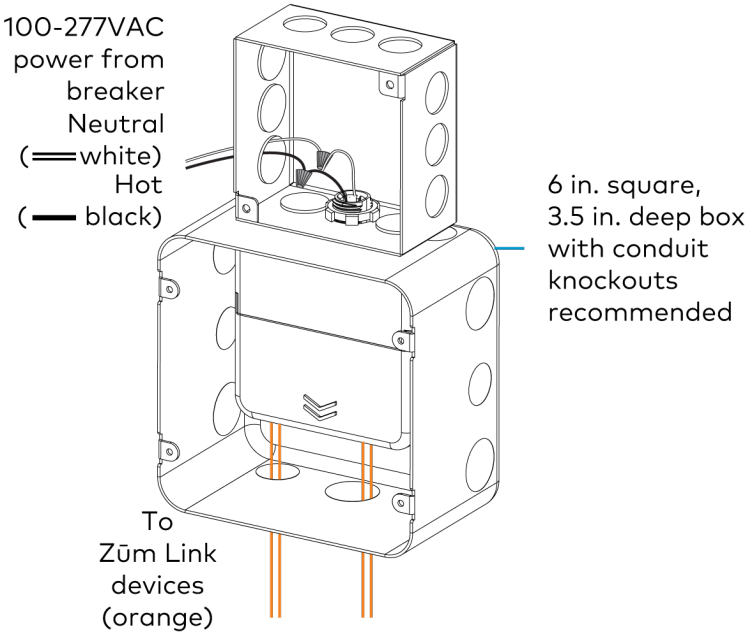

Zūm Wired System Diagram

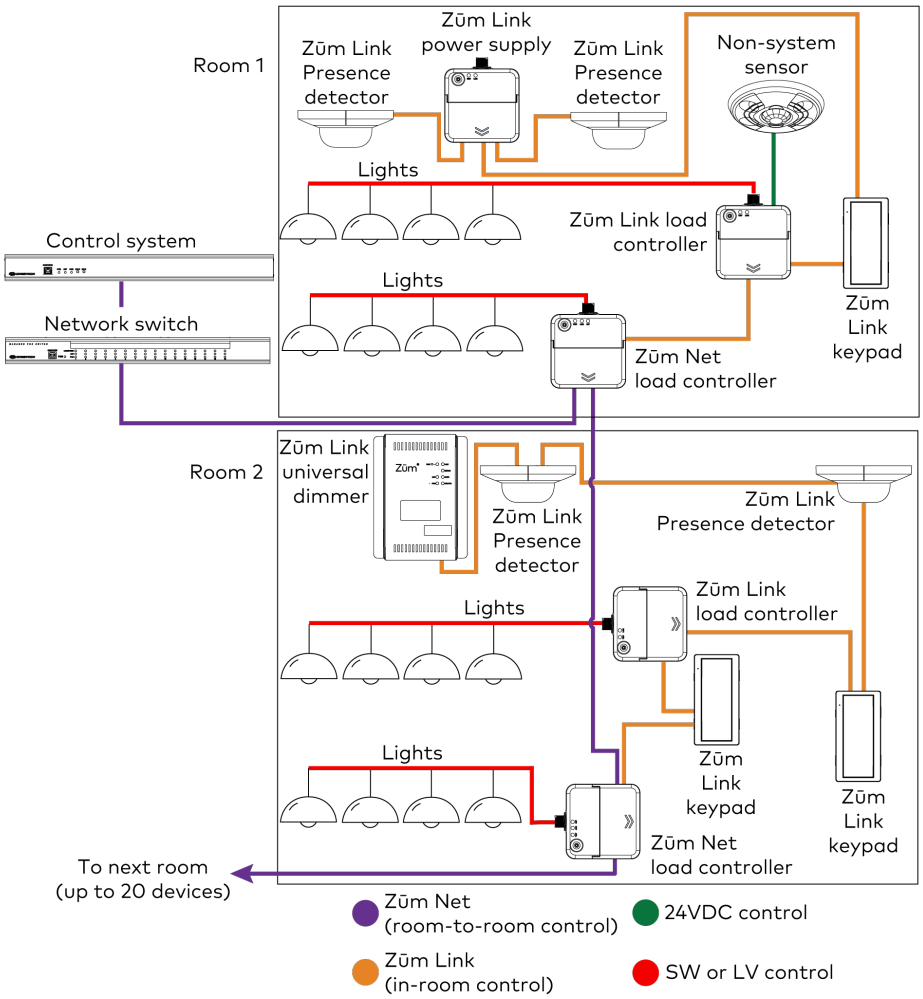

NOTES:

- Daisy-chain up to 20 Zūm Net devices (up to 328 ft (100 m) between Zūm Net devices) with purple CBL-CAT5E-ZUMNET-P RJ-45 cables (sold separately).
- Do not exceed three network switches between a ZUM-HUB4 and a Zūm Net device.
- System sensors communicate digitally via Zūm Link. Non-system sensors communicate via an analog connection on a Zūm Wired load controller.

Cable Accessory Installation

Refer to the following sections for using the ZUMLINK-SPLTR-RJ45 and ZUMLINK-CONV-CN in a Zūm Wired system. For example application diagrams, refer to Application Scenarios on page 40.

In the Box

Qty.	Description
1	ZUMLINK-CONV-CN, Zūm® Wired Adapter Cable for Cresnet® Devices or ZUMLINK-SPLTR-RJ45, Zūm® Wired RJ-45 Splitter

ZUMLINK-SPLTR-RJ45 Connections

The ZUMLINK-SPLTR-RJ45 is a pass-through accessory that splits one Zūm link signal into two ports. Use Zūm link cable (CBL-CAT5E-ZUMLINK-P) to connect bidirectional RJ-45 ports to Zūm link devices, including Zūm link load controllers, sensors, or keypads.

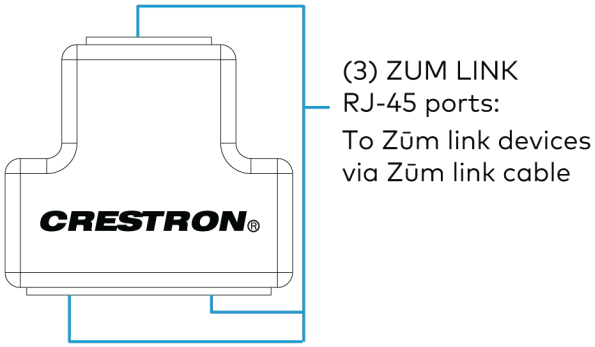

ZUMLINK-CONV-CN Connections

The ZUMLINK-CONV-CN integrates Cresnet devices into a Zūm system. Use the Zūm link cable (CBL-CAT5E-ZUMLINK-P) to connect the RJ-45 port to Zūm link sensors and keypad. Connect the Cresnet terminal block to legacy Cresnet lighting products, including a SpaceBuilder® system (such as the CL-SPACEBUILDER-DIN) or traditional processor panel.

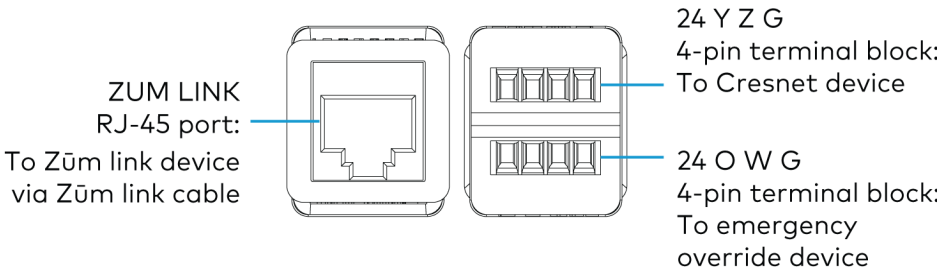
ZUM LINK
RJ-45 port:
To Zūm link device
via Zūm link cable
24 Y Z G
4-pin terminal block:
To Cresnet device
24 O W G
4-pin terminal block:
To emergency
override device

Cresnet Terminal Block Connections

Terminal	Description
24	24V power
Y	Data terminal pass-through only
Z	Data terminal pass-through only
G	Ground

Emergency Override Terminal Block Connections

Terminal	Description
24	24V power
O	Emergency override
W	Future use
G	Ground

Rocker and Button Tree Installation

The ZUMLINK-KP comes preassembled with the white ZUMLINK-BTNR rocker button. The following procedure describes how to replace the bezel and rocker button with a new bezel and rocker button/button tree.

In the Box

Qty.	Description
1	ZUMLINK-BTN, 2, 4, 6, or 8 Button Tree with Bezel for Zūm® Light Control Keypads (ZUMLINK-KP) or ZUMLINK-BTNR, Rocker Button with Bezel for Zūm® Light Control Keypads (ZUMLINK-KP)

NOTE: ZUMLINK-BTN and ZUMLINK-BTNR are available with blank, pad-printed, or custom engraved buttons and in almond, black, gray, red, and white finishes.

Install a Bezel and Rocker Button or Button Tree

To replace the bezel and rocker button with a new bezel and rocker button/button tree:

1. Remove the faceplate from the keypad.
   If a Crestron FP-G series faceplate (not included) is installed, remove only the cover.
2. Use a flat-head screwdriver to remove the bezel and rocker button by pressing the screwdriver into the notches on the side of the keypad.
   The bezel and rocker button release from the keypad.

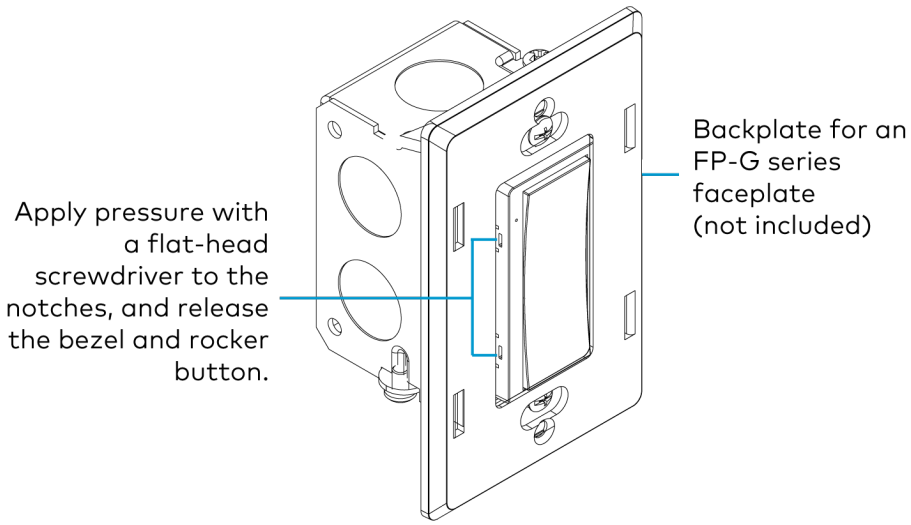

3. Position the replacement rocker button/button tree on the keypad.

4. Place the replacement bezel on top of the rocker button/button tree, making sure to align the LED hole with the LED on the keypad, and snap the bezel into place.

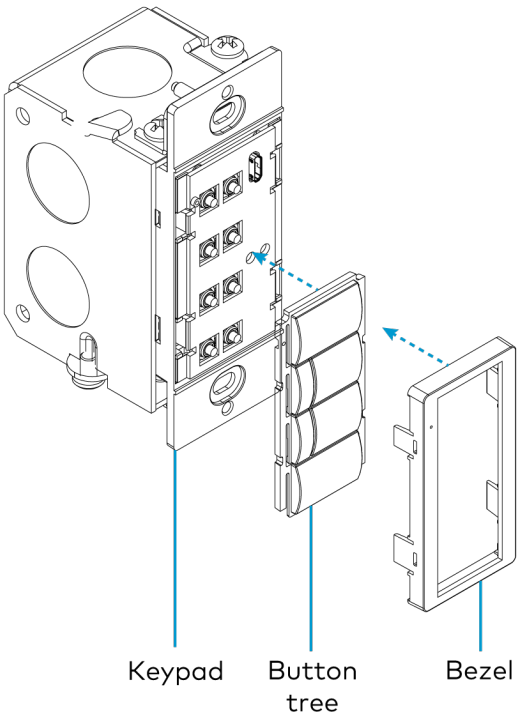

For more information about installing the ZUMLINK-KP, refer to Keypad Installation on page 111.

Operation

A Zūm Wired space consists of at least one Zūm Net or Zūm Link load controller connected to lights, sensors or another Zūm Wired device. Once the devices are installed and connected together in a space, they communicate with each other. Without any programming, the devices behave as described below.

> **NOTE:** To add an Zūm Wired device to an existing space, simply connect the device and it will become part of the space logic.

Refer to the following operation sections.

- Load Controller Operation
- Universal Dimmer Load Controller Operation
- Keypad Operation
- Presence Detectors Operation

Load Controller Operation

In a room with multiple load controllers, one load controller is the primary controller and the others are secondary. Observe the LINK LED to identify the primary load controller. The LINK LED on the primary load controller consistently flashes for 0.5 seconds on and 0.5 seconds off.

Additional LED behavior is described in the following tables.

LED Status for Room Primary Load Controllers

LED	LED Color	Description
LINK	Off	The load controller is not polling any secondary load controllers.
LINK	Green (flashes 0.5 seconds on and 0.5 seconds off)	The load controller is the room primary load controller.
TEST	Off	The local load is off.
TEST	Green	The local load is on.
NET (ZUMNET-JBOX only)	Off	The ZUMNET-JBOX is not connected to a control system or ZUM-HUB4.
NET (ZUMNET-JBOX only)	Green	The ZUMNET-JBOX is connected to a control system or ZUM-HUB4.
NET (ZUMNET-JBOX only)	Red	The ZUMNET-JBOX lost connection to a control system or ZUM-HUB4.

LED Status for Secondary Load Controllers (ZUMLINK-JBOX only)

LED	LED Color	Description
LINK	Off	The load controller is not being polled by the room primary load controller.
LINK	Green (solid)	The load controller is actively being polled by the room primary load controller.
TEST	Off	The local load is off.
TEST	Green	The local load is on.

Perform a Factory Reset on a Load Controller

On the load controller, press and hold the **TEST** button for 10 seconds. Release the button when all LEDs turn red. Wait a few seconds for the factory reset to finish.

NOTES:

- Performing a factory reset on the primary Zūm Wired load controller restores the space to default functionality and resets the load controller as a secondary device that no longer controls the space. Refer to Assign a Load Controller as the Primary Controller on page 151.
- Performing a factory reset on any other Zūm Wired load controller or device in the space only restores the default settings for that device.

Assign a Load Controller as the Primary Controller

Change a load controller from the primary controller to secondary or a secondary controller to primary.

> **NOTES:**
>
> - Only one load controller can be assigned as the primary load controller in a Zūm space.
> - Zūm Net load controllers are preconfigured as a primary devices. In applications with more than one Zūm Net load controller in the same Zūm space, keep one Zūm Net load controller as the primary controller and follow the procedure to set the others as secondary controllers.

To assign aload controller as the primary or secondary controller:

1. Tap the **TEST** button three times, then press and hold for five to seven seconds.
2. Release the button when the LINK LED flashes red. The load controller reboots.

   After three to five minutes, the LINK LED flashes 0.5 seconds on and 0.5 seconds off consistently.
3. Connect to the Zūm app and confirm the load controller assignment.

Reboot a Load Controller

To reboot a load controller:

1. Tap the **TEST** button four times, then press and hold for five seconds.
2. Release the button when all LEDs flash red.

Remove a Missing Device from a Zūm Wired Room

To remove a missing device from a Zūm Wired room:

1. Identify the primary load controller.

   The LINK LED on the primary load controller consistently flashes for 0.5 seconds on and 0.5 seconds off.

2. Perform a factory reset on the load controller.

   Refer to Perform a Factory Reset on a Load Controller on page 149.Refer to Perform a Factory Reset on a Load Controller.

3. Reassign the load controller as the primary controller.

   Refer to Assign a Load Controller as the Primary Controller on page 151.

> **NOTE:** Performing a factory reset on a primary load controller erases all previous room logic to the default settings.

Refer to Zūm App Configuration on page 159for configuring the device.

Universal Dimmer Load Controller Operation

Follow the sections below to operate the ZUMLINK-EXP-16A-DIMU and configure the device. To configure the device using the Zūm app. refer to Load Controllers Zūm App Configuration on page 166.

Set the Dimming Mode

The ZUMLINK-EXP-16A-DIMU uses Auto Dimming mode to determine the attached load type and applies Forward Phase (leading edge) or Reverse Phase (trailing edge) Dimming mode based on the auto-detected load type.

WARNINGS:

- Auto Dimming mode should not be disabled unless suggested by a Crestron True Blue Technical Support representative. Incorrectly setting these switches to force the wrong mode can cause damage to the dimmer and lighting fixture or create a hazardous condition.
- Only use Center Dimming mode if instructed by a Crestron True Blue Technical Support representative.

If necessary, set the ZUMLINK-EXP-16A-DIMU to operate in Forward Phase, Reverse Phase, or Center Phase Dimming mode.

1. Remove the cover as shown in Universal Dimmer Load Controller Operation on page 153.
2. Press the **DIM MODE** button until the desired dimming mode is indicated by the REV, AUTO, FWD, or CENTER LED.

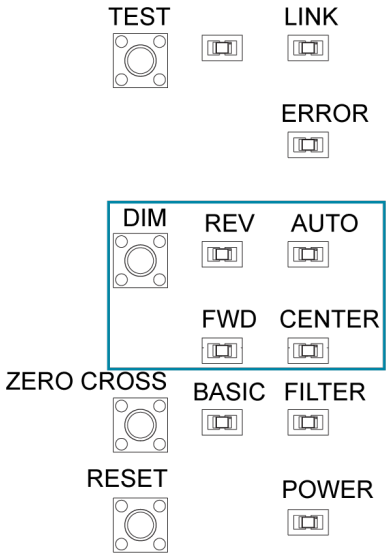

Test the Loads

To verify system wiring, the loads can be tested before setting up the Zūm space. Press the **TEST** button to toggle the connected loads on and off. Press and hold the **TEST** button to cycle dim the connected loads.

Factory Reset

A factory reset should be performed when the ZUMLINK-EXP-16A-DIMU is removed from the network or to remove the configuration settings from the device. The ZUMLINK-EXP-16A-DIMU must also be factory reset if it is being moved to a different system.

> **NOTE:** New-in-box devices do not need to be factory reset before joining a system.

To factory reset the ZUMLINK-EXP-16A-DIMU, press and hold the **TEST** button until the TEST LED lights (about 10 seconds), and then release the button. The TEST LED and the connected load output turn on to indicate that the factory reset procedure is complete.

Universal Dimmer LEDs

The LEDs on the cover operate as follows:

- TEST: Lights when the connected loads are on.
- NET: Lights to indicate that it is joined to a Zūm space. Flashes when the ZUMLINK-EXP-16A-DIMU receives a message.
- ERROR: Flashes to indicate an error in the line or load. Refer to Error States on page 154.
- AUTO: Lights to indicate that the dimmer is in Auto Dimming mode. When operating in Auto Dimming mode, the REV or FWD LED lights to indicate the dimming mode is in use.
- REV: Lights to indicate that the dimmer is in Reverse Phase Dimming mode.
- FWD: Lights to indicate that the dimmer is in Forward Phase Dimming mode.
- CENTER: Lights to indicate that the dimmer is in Center Phase Dimming mode.
- FILTER: Lights to indicate that the zero-cross filter is applying filtering to sync the AC line power.
- BASIC: Lights to indicate that the zero-cross filter is performing basic filtering.

Error States

The following table provides corrective action error states that are indicated by the ERROR LED. If further assistance is required, please contact a Crestron True Blue Technical Support representative.

LED Flash Pattern	Issue	Action
1-1	The secondary processor is in bootloader.	Power cycle the unit.

LED Flash Pattern	Issue	Action
1-2	The secondary processor is unresponsive.	Power cycle the unit.
1-3	The secondary processor firmware update failed.	Power cycle the unit.
2-1	There is an overcurrent error.	Check the output for a short circuit or overload. Verify that the device is not dimming in Forward Phase Dimming mode with incandescent or electronic drivers connected.
2-2	A FET is shorted.	Contact Crestron's True Blue Technical Support.
2-3	An overtemperature error exists.	Check the output for overload. Ensure that the device is receiving adequate air for cooling.
2-4	An overvoltage error exists.	Verify that the device is not dimming magnetic transformer loads in Reverse Phase Dimming mode.
3-1	A zero-cross sync error exists.	Change the Zero-cross mode from Basic mode to Filter mode.
3-2	No AC Power.	Verify that the incoming AC voltage is within spec.

Zero-Cross Filter

An unusual line condition, indicated by a 3-1 flash pattern from the ERROR LED, can be corrected by changing the Zero-cross mode from Basic mode (default) to Filter mode. Consult with Crestron's True Blue Technical Support before changing the Zero-cross mode. To change the Zero-cross mode:

1. Remove the cover as shown in Universal Dimmer Load Controller Operation on page 153.
2. Press the **ZERO CROSS** button. The BASIC or FILTER LED lights.
    - BASIC LED: Indicates that basic filtering is being performed.
    - FILTER LED: Indicates that the ZUMLINK-EXP-16A-DIMU is using filters to sync the AC line power.

Keypad Operation

The ZUMLINK-KP-R controls most of the connected load controllers in a space.

> **NOTE:** The ZUMLINK-KP-R will not control a ZUMLINK-JBOX-20A-PLUG.

ZUMLINK-KP Functionality When Connected to Load Controllers

Load Controller	Top Button Tap	Top Button Hold	Bottom Button Tap	Bottom Button Hold
ZUMNET-JBOX-16A-LV and ZUMLINK-JBOX-16A-LV	Recalls Scene 1	Raise all loads	Recalls Off	Lower all loads
ZUMLINK-JBOX-20A-SW	Recalls On	N/A	Recalls Off	N/A
ZUMLINK-JBOX-20A-PLUG	N/A	N/A	N/A	N/A

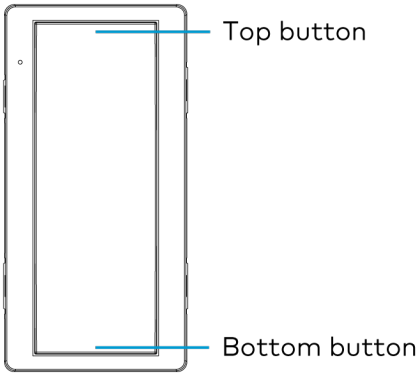

The ZUMLINK-KP-R can be used with any ZUMLINK-BTN button tree for up to 8 programmable buttons. Use the Zūm app to change a button's default functionality. Each of the buttons can be programmed with the following functions:

- None
- Off: Assigned loads controllers turn off.
- On: Assigned loads turn on
- Raise: Assigned load controllers raise.
- Lower: Assigned load controllers lower.
- Recall Scene 1 - Scene 16: Assigned load controllers recall the behavior set for the specified scene.

Refer to Zūm App Configuration on page 159for configuring the device.

Presence Detectors Operation

Non-system (such as the GLA-IR-QUATTRO-HD-COM1-24 or GLS-ODT-C-NS) and system sensors (such as the ZUMLINK-IR-QUATTRO-DLS) will trigger and control the connected load controller. Non-system sensors connect to the load controller via the I/O ports, while system sensors connect to the load controller via a CBL-CAT5E-ZUMLINK-P cable.

For presence detectors with a relay (such as the ZUMLINK-IR-QUATTRO-DLS-RLY), the default function is set to None. Use the Zūm app to change the functionality to follow occupancy logic or button presses.

Presence Detector Functionality When Connected to Load Controllers

Load Controller	Occupancy Detected	Vacancy Detected
ZUMNET-JBOX-16A-LV and ZUMLINK-JBOX-16A-LV	Recalls Scene 1 (all on)	Recalls Scene 16 (all off)
ZUMLINK-JBOX-20A-SW	On	Recalls Scene 16 (all off)
ZUMLINK-JBOX-20A-PLUG	On	Off after grace period delay

Refer to Zūm App Configuration on page 159for configuring the device.

To adjust the presence detector sensitivity, refer to Sensor Test Mode on page 211.

Configuration

Before using a Zūm Wired device, ensure it is updated with the latest firmware. Check for the latest firmware at www.crestron.com/firmware. Load the firmware onto the device using Crestron Toolbox™ software, the ZUM-HUB4 web interface (refer to Version Management on page 252), or the Zūm app (refer to Update Firmware with the Zūm App on page 160).

Once all of the devices are installed in the space and using the latest firmware, use the Zūm app to modify default room behavior. Expedite commissioning by copying a room configuration and sending it to a room with identical devices. Save a room configuration template and share it via email, or other methods available on the device. A template can be deployed to any identical room via the Zūm app or the ZUM-HUB4.

> **NOTE:** The ZUMLINK-KP Bluetooth® connection is required to configure a Zūm wired space with the Zūm app.

This section provides the following information:

- Zūm App Configuration
- Hub Web Interface

Zūm App Configuration

Download the Zūm app from the Google Play™ online store or the Apple® App Store® online store.

To use the Zūm app:

1. Enable Bluetooth wireless connection on your device to communicate with the Zūm space.
2. Launch the Zūm app and grant the permissions the app requests. The Zūm app displays a list of available spaces.

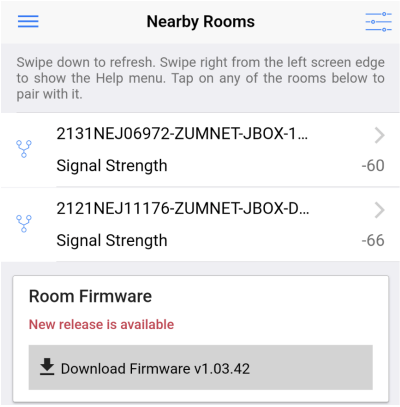

3. If new firmware is detected, update the firmware. Refer to Update Firmware with the Zūm App on page 160.
4. Select the desired space.
5. When prompted, enter the PIN. The Zūm app main screen opens.

NOTES:

- For Primary load controllers running firmware 3.6.18 and higher, the default PIN is 246800. For firmware lower than 3.6.18, the default PIN is 2468.
- To change the PIN, navigate to the Room Settings. When changing the PIN, the previous PIN is required.
- The first failed log-in attempt locks the user out of the Zūm space. With subsequent failed attempts, the lockout duration increases up to 60 minutes.
- The lockout duration resets when the correct PIN is entered, the Primary load controller reboots, or when the PIN is changed from the Web-Interface.

Update Firmware with the Zūm App

Follow the required work flow to update device firmware for a Zūm space. Each Zūm space must be updated separately.

- Load the Latest Firmware to the App on page 160
- Update Firmware for a Zūm Space on page 161

Load the Latest Firmware to the App

If new firmware is detected when connecting to the Zūm app, the **Room Firmware** window appears on the **Nearby Rooms** screen.

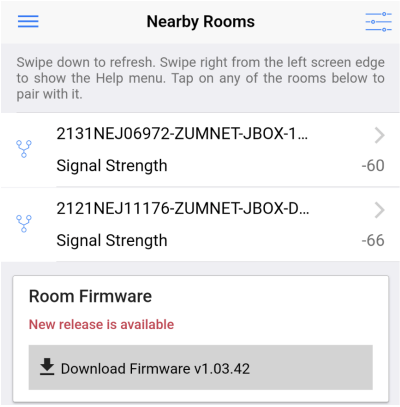

Tap **Download Firmware** to load the firmware to the app. The **Room Firmware** window message changes when the firmware is successfully downloaded. The Zūm app is now ready to connect to the Zūm space and start updating outdated devices.

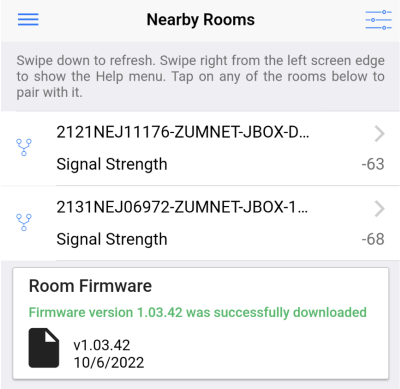

Update Firmware for a Zūm Space

WARNING: Interrupting the firmware update can cause the update to fail. To avoid interrupting the firmware update, follow these best practices:

- Place the mobile device in Do Not Disturb Mode.
- Do not minimize or place the Zūm app in the background.
- Do not lock the mobile device.

To update device firmware in a Zūm space.

1. Choose the desired Zūm space to access the **Main** screen and tap **Firmware**.

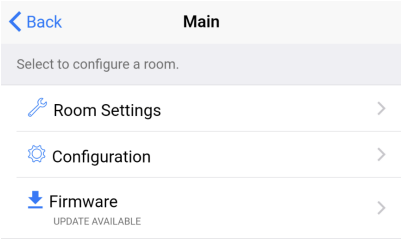

2. Tap **Update Now** to initiate the firmware update for STEP 1. Devices are grouped based on the device type.

NOTE: The number next to the device type indicates the number of devices of that type that need to be updated in that Zūm space.

3. When the **Update Firmware** confirmation displays, select **Yes** to continue or **No** to cancel and return to **Firmware**. The confirmation also estimates the amount of time it will take to update the room based on the number of devices.

> **NOTE:** The Zūm space is inaccessible via Bluetooth until the firmware update process is complete.

4. When all of the devices are updated in a Zūm space, a notification displays stating the update is complete. Click **OK**, and repeat the process for every Zūm space listed in **Nearby Rooms**.

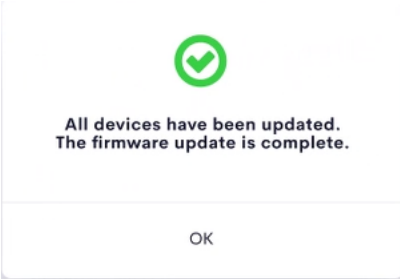

5. If a device fails to update, a notification opens stating that some of the devices were not updated. Click **OK**.

   The notification closes and displays the **Nearby Rooms** screen. To restart the firmware update, select the room and repeat the procedure from step 1 until all of the devices have been successfully updated.

Zūm App Main Screen

From the **Nearby Rooms** screen, tap the desired room to open the **Main** screen. The following sections describe the actions available for each area of the **Main** screen.

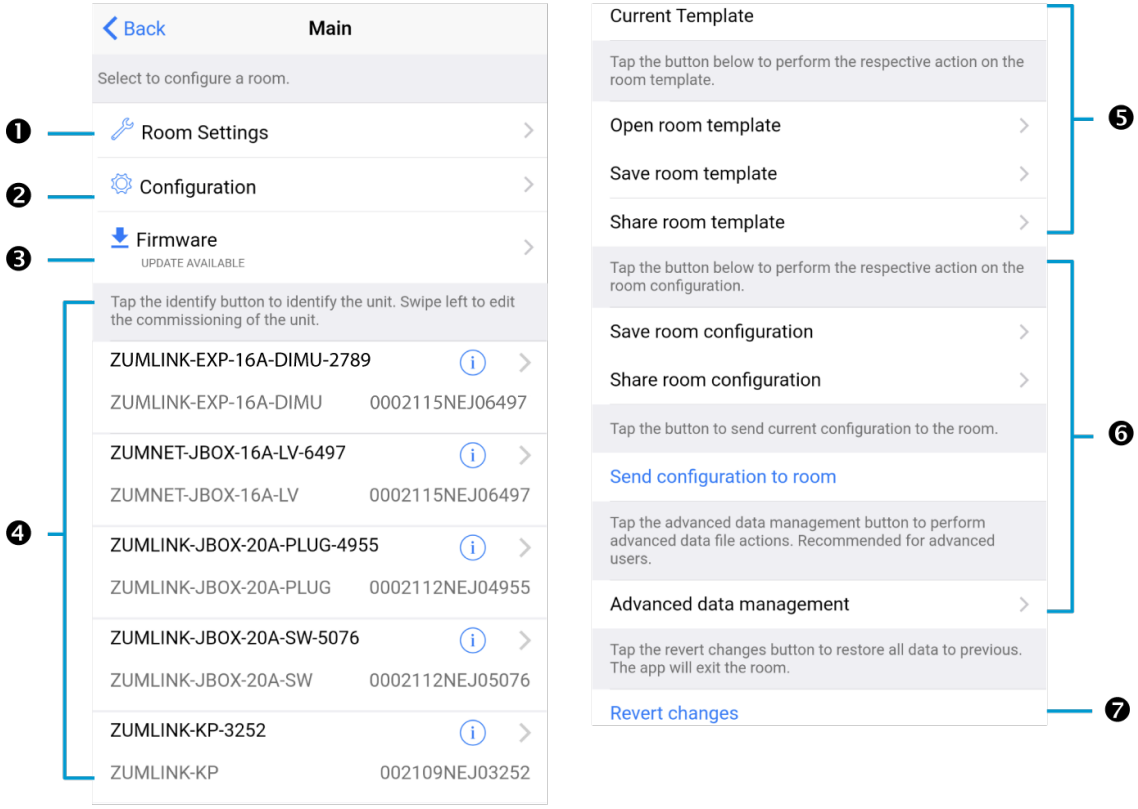

NOTE: The numbers below correspond with the numbers in the **Main** screen diagram.

1. Room Settings: Edit the Room Name, PIN, Floor ID, Zone ID, and Network information.
2. Configuration: Edit the room logic to view the current state of the room.
    - Occupancy Sensors: View details for the connected sensor(s) or edit the sensor name.
    - Photo Sensors: View details for the connected sensor(s) or edit the sensor name.
    - Load Controllers: Identify and view details for the connected load controller(s).
    - Scenes: View and edit room scenes: Scene 1 - Scene 16. When editing the scene, tap the Identify icon ⓘ to identify the load controller. The load controller emits a sound and flashes the Link LED. The connected loads also flash.
    - Keypads: Identify and view details for the connected keypad(s). Edit the keypad name and assign the button layout.
    - Load Shedding: Set the maximum levels for load shedding.
    - Load/Sensor Groups: Create groups within the room.
    - DALI Controllers: Address drivers, create DALI groups, assign drivers, and identify drivers.
    - Current Scene: Displays the current room scene.
    - Occupancy Status: Displays occupied or vacant. If any area of the room is occupied, then the status is Occupied. When all areas of the room are vacant, the status is Vacant.
3. Firmware: To update firmware, refer to Update Firmware with the Zūm App on page 160.
4. List of devices: Identify a device and edit the commissioning settings

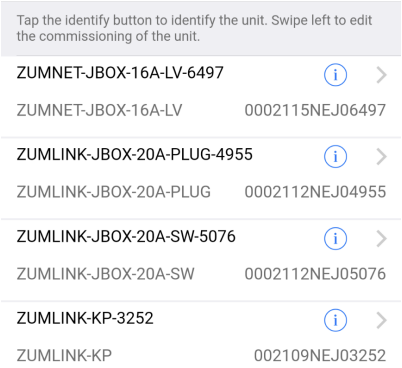

    - Tap the Identify icon ⓘ to identify a device. A load controller emits a sound and the Link LED flashes. The connected loads also flash. A keypad flashes its LED.
    - Tap the device to edit or review the device details: Edit Name. Review the Model, Serial Number, Status, and edit the device settings.

5. Current Template Settings: Choose Open room template, Save room template, or Share room template.

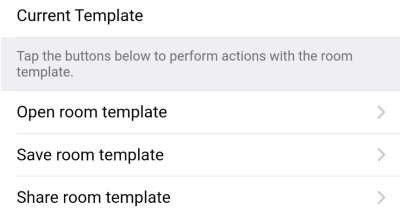

6. Configuration Data:
   - Save room configuration: Save the room configuration data in the space.
   - Share room configuration: Share the room configuration data in the space.
   - Send configuration to room: Send room logic changes made in the app to the room.
   - Advanced data management: Review the Map, Logic, and Settings of the data currently loaded. Load, save or share new Map, Logic, or Settings data.

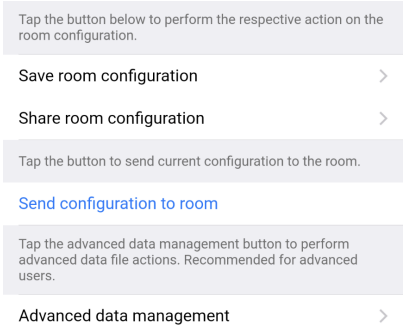

> **NOTE:** Changes made in the app are not sent to the room until they are deployed using the Send configuration to room button.

7. Revert changes: Restore all non-deployed changes made since launching the app.

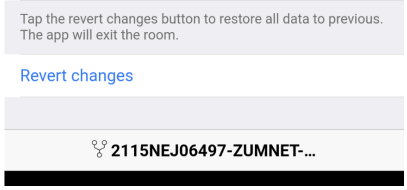

Load Controllers Zūm App Configuration

The following sections describe Zūm app configuration for the ZUMNET-JBOX-16A-LV, ZUMLINK-JBOX-16A-LV, ZUMLINK-JBOX-20A-PLUG, and ZUMLINK-JBOX-20A-SW load controllers.

For ZUMNET-JBOX-DALI commissioning, refer to DALI Load Controller Zūm App Commissioning on page 189.

Navigating the Configuration Screens

Load controllers have three components: the load controller, a photo sensor, and an occupancy sensor. Each component is configurable and there are two ways of accessing the configuration pages from the Main screen.

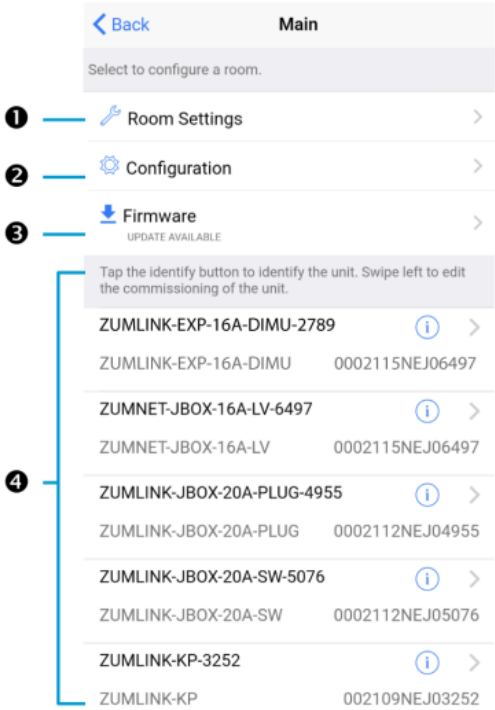

View Individual Components by Type

To view individual components by type:

1. Tap on **Configuration** (number 2 in the image above).
2. Tap the desired component category: **Load Controllers**, **Occupancy Sensors**, or **Photo Sensors**.

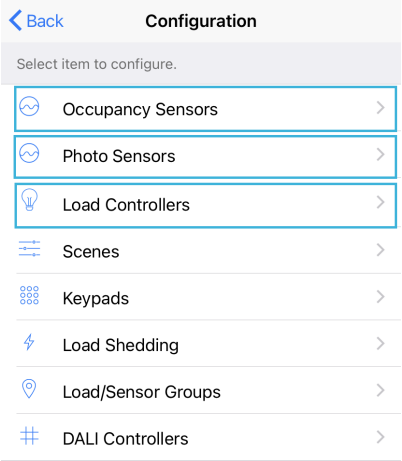

3. Tap the desired component to begin the configuration.

> **NOTE:** Tap the Identify icon ⓘ to identify a device. A load controller emits a sound and the Link LED flashes.

View a Load Controller and its Components

To view a load controller and its components:

1. Tap on the load controller in the list of devices (number 4 in the image above) to view information about the load controller.
2. (Optional) Tap in the **Name** field to edit the load controller name.
3. Tap on the desired component to begin the configuration.

> **NOTE:** Tap the Identify icon ⓘ to identify a device. A load controller emits a sound and the Link LED flashes.

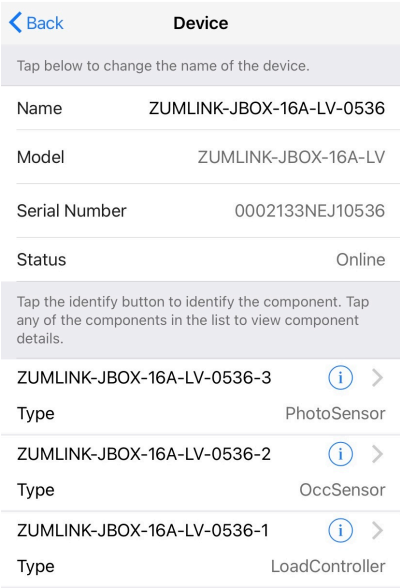

Occupancy Sensor Component

Navigate to the OccSensor component configuration page for the load controller.

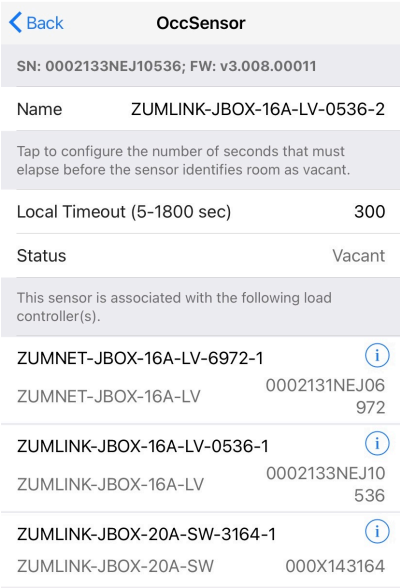

- Name: Edit the name of the photo sensor component.
- Local Timeout (5-1800 sec): Set the duration of time the sensor must wait before designating a room as vacant.
- Status: States the room status as Vacant or Occupied.
- List of load controllers associated with the occupancy sensor component.

> **NOTE:** Tap the Identify icon ⓘ to identify a device. A load controller emits a sound and the Link LED flashes.

Photo Sensor Component

Navigate to the PhotoSensor component configuration page for the ZUMNET-JBOX-16A-LV, ZUMNET-JBOX-DALI, ZUMLINK-JBOX-16A-LV, ZUMLINK-JBOX-20A-PLUG, or ZUMLINK-JBOX-20A-SW.

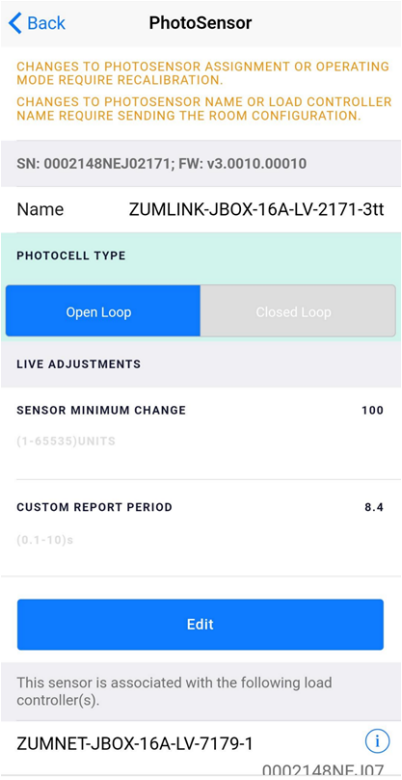

- **Name:** Click in the Name field to edit the name of the photo sensor component.
- **Photocell Type:** Choose **Closed Loop** or **Open Loop** mode.

> **NOTES:** Zūm Link presence detectors only have **Closed Loop** mode. Analog sensors connected to a load controller can function in **Closed Loop** or **Open Loop** mode.
>
> - Open-Loop mode senses natural light.
> - Closed-Loop mode senses natural and artificial light.

- **Live Adjustments:** Click **Edit** to make live adjustments to the **Sensor Minimum Change** or the **Custom Report Period**. If any changes are made, click **Apply** to save and return to the **PhotoSensor** page.
  - **Sensor Minimum Change (1-65535) UNITS:** The minimum amount of light level change detected by the photosensor before it sends data back to the load controller.

    > **NOTE:** Sensor Minimum Change range for Closed-Loop mode is (10-100) Units.

  - **Custom Report Period (0.1 - 10) s:** Set how frequently photosensor light reading data is sent. This overrides any Closed-Loop or Open-Loop mode default settings.

  > **CAUTIONS:**
  > - Calibrate daylighting before making any live adjustments. For details, refer to Calibrate Daylighting Settings on page 170.
  > - Make live adjustments during daylight hours.

- List of load controllers associated with the photo sensor component.

Calibrate Daylighting Settings

> **CAUTION**: Calibrate daylighting during daylight hours.

The photocell component of a Zūm Link presence detector, Zūm Net load controller, Zūm Link load controller, Zūm Link universal dimmer load controller detects the amount of ambient light in the room. When a space is calibrated for Daylighting and Scene 1 is called, the photocell will detect the ambient light levels and dim the lights accordingly.

> **NOTE:** Daylighting is not supported for the load controller components of the following devices: ZUMLINK-JBOX-20A-PLUG, ZUMLINK-JBOX-20A-SW, ZUMLINK-IR-QUATTRO-DLS-RLY, ZUMLINK-DT-QUATTRO-DLS-RLY, ZUMLINK-US-QUATTRO-DLS-RLY, ZUMLINK-IR-QUATTRO-HD-DLS-RLY, ZUMLINK-US-HALLWAY-DLS-RLY, and ZUMLINK-US-ONEWAY-DLS-RLY.

Calibrating Daylighting requires three main steps:

1. Assign the photocell component to the load controller.
2. Send the new configuration to the space.
3. Calibrate Daylighting.

To calibrate the daylight settings:

1. Assign the photocell component to the load controller that will participate in Daylighting.
   a. Navigate to the photocell component's configuration page.
   b. For Photo, select a photocell from the drop-down menu.

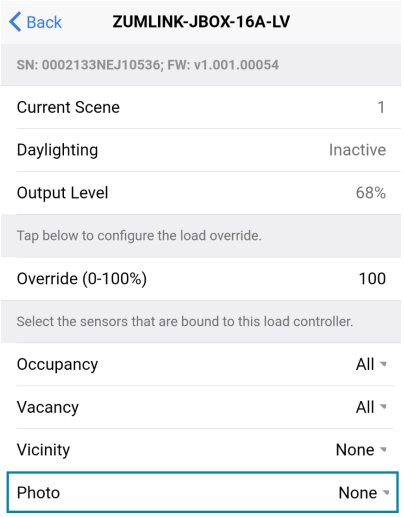

2. Send the configuration to the room.
   a. Navigate back to the Main screen.
   b. Click **Send configuration to room**.

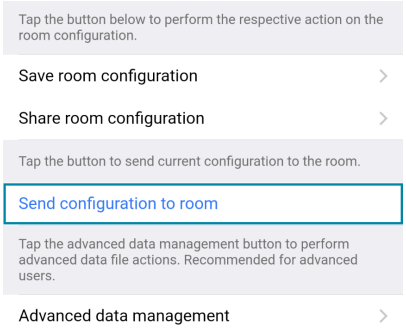

   A confirmation window opens stating that the app will disconnect from the room. Click **OK** to continue or **Cancel** to close without sending the configuration. The Retrieving Data Map screen displays.

3. Calibrate Daylighting.
   a. Navigate back to the Main screen.
   b. Click **Room Settings**.

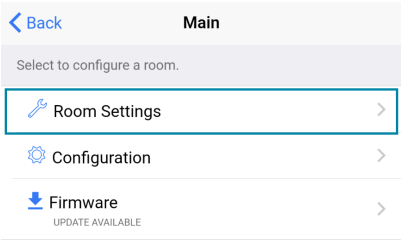

c. Click **Daylighting**.

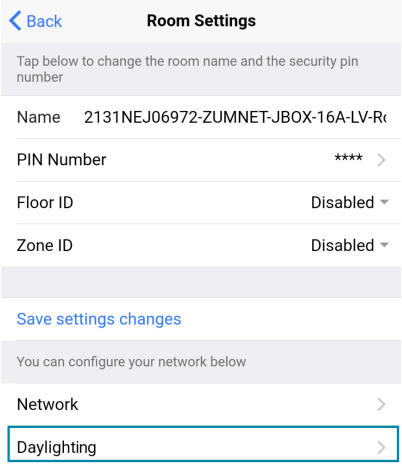

d. Click **Daylighting Calibration**.

During Daylighting calibration, the lights in the space will turn full on, turn off, and then back on with the Daylighting settings.

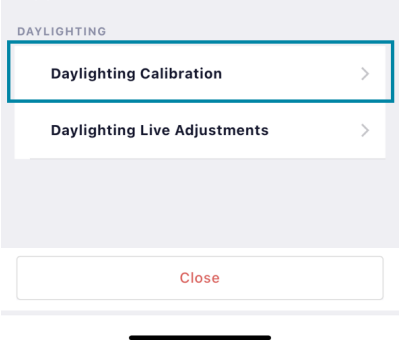

e. Use the slider to set the daylighting scene, and then click **Calibrate daylighting**.

When on the Daylighting Calibration page, Daylighting mode is paused. When Daylighting calibration begins, a message appears at the top of the page that calibration is in progress. The message will go away when calibration ends.

The Daylighting Calibration page has three sections:

- **Assigned to Photosensor (Dynamic Daylighting):** List of load controller components with a photosensor assigned. Adjust the slider from 1 - 100% to modify the output level of the load and calibrate accordingly.
- **Not Assigned to Photosensor (Static Scene 1):** List of load controller components without a photosensor assigned and will not participate in daylighting. The output levels of load controllers cannot be modified in the Daylighting Calibration page. Output levels shown reflect the settings for Scene 1.
- **Unsupported Load Controllers:** List of load controller components that do not support daylighting, such as a ZUMLINK-JBOX-20A-PLUG, ZUMLINK-JBOX-20A-SW, or ZUMLINK-IR-QUATTRO-DLS-RLY.

f. Click **Close** to exit **Daylighting Calibration**.

Reset Daylighting

To reset the daylighting configuration:

1. Click **Room Settings**.

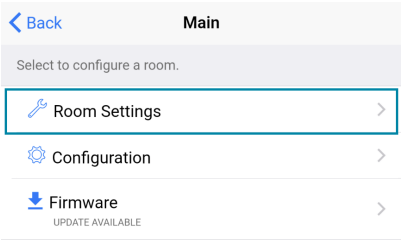

2. Click **Daylighting**.

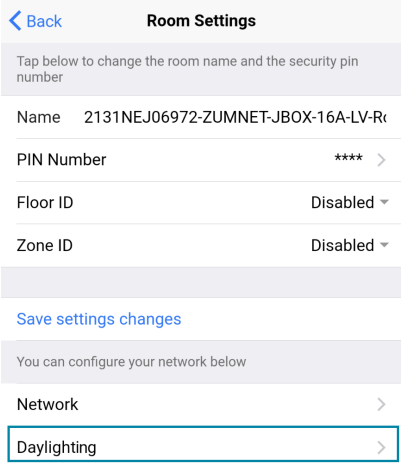

3. Click **Daylighting Calibration**.

   During Daylighting calibration, the lights in the space will turn full on, turn off, and then back on with the Daylighting settings.

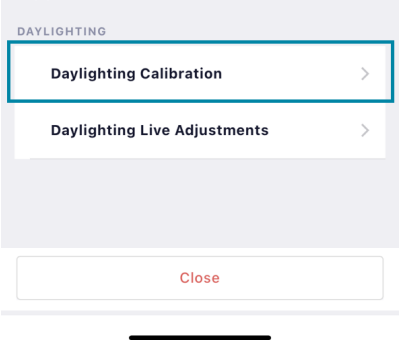

4. Click **Reset Daylighting**.

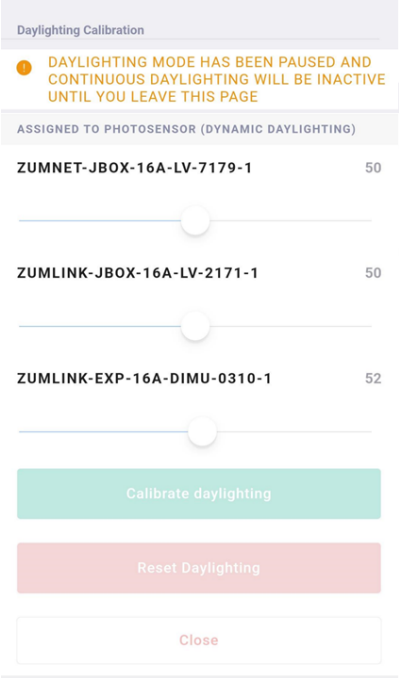

5. Click **Yes** to confirm.

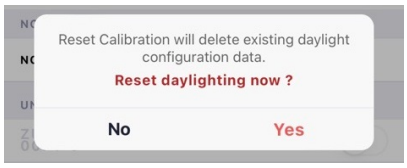

Make Live Adjustments to the Daylighting Scene

CAUTIONS:

- Calibrate daylighting before making any live adjustments. For details, refer to Calibrate Daylighting Settings on page 170.
- Make live adjustments during daylight hours.

To make live adjustments to the daylight scene:

1. Click **Room Settings** on the Main screen.

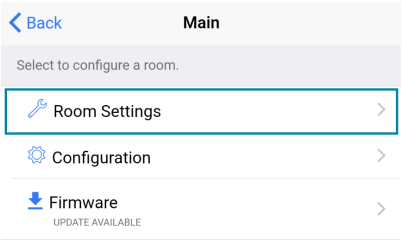

2. Click **Daylighting**.

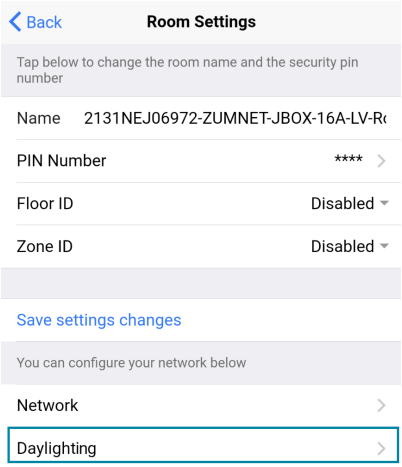

3. Click **Daylighting Live Adjustments**.

   During Daylight calibration, the lights in the space will turn full on, turn off, and then back on with the Daylighting settings.

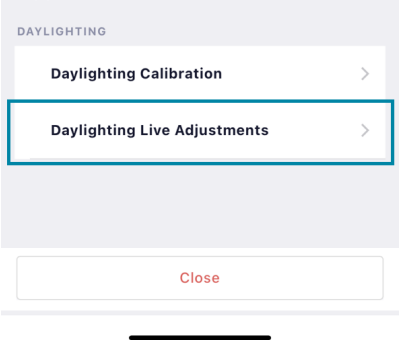

4. Select the desired component from the list to open the **Daylighting Zone** page.

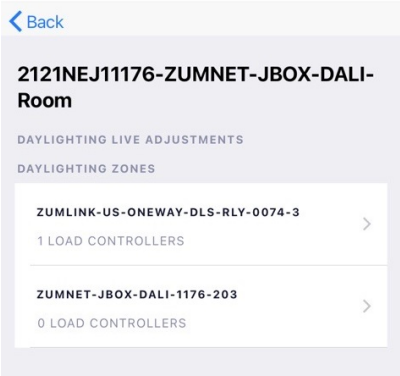

5. Make the following adjustments and click **Apply** to save changes. Once applied, the page closes and returns to the list of components.
   - **Sensor Minimum Change (10-100) UNITS:** The minimum amount of light level change detected by the photosensor before it sends data back to the load controller.

     > **NOTE:** Sensor Minimum Change range for Open-Loop mode is (1-65535) Units.

   - **Custom Report Period (0.1-10) s:** Tap to enable. Set how frequently photosensor light reading data is sent. This overrides any Closed-Loop or Open-Loop mode default settings.

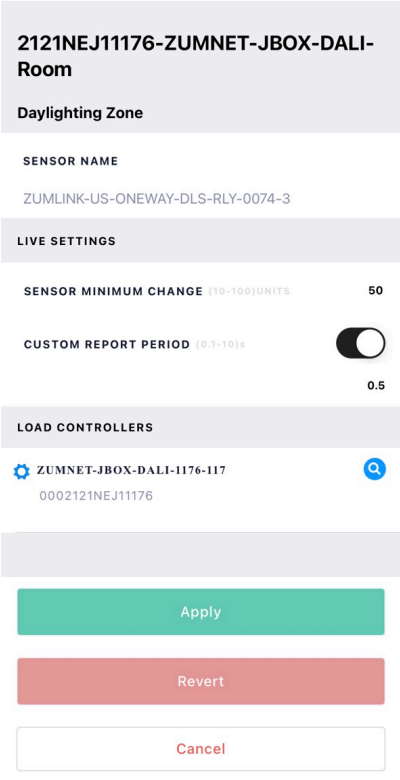

6. Click the load controller listed to live edit the daylighting settings.

7. Make the following adjustments and click **Apply** to save changes. Once applied, the page closes and returns to the **Daylighting Zone** page.
    - **Daylighting Target Level:** The target and calibrated light level of the load that is configured to participate in the daylighting scene.
    - **Daylighting Response Time:** Time it takes for a load controller to ramp from 0 to 100% light level while configured for daylighting.
    - **Daylighting Sensitivity Adjust:** Selects how sensitive daylighting should be to reach the target setting. More sensitivity (positive number) will ramp up and down more aggressively to reach the target. Less sensitivity (negative number) will ramp more slowly.
    - **Daylighting Gain Adjust (Open-Loop mode only):** Allows more or less aggressive daylighting curve and overall response in the light level ramping.
    - **Daylighting Minimum Level:** The lowest light level the photosensor can ramp down to in Scene 1 and still participate in daylighting.

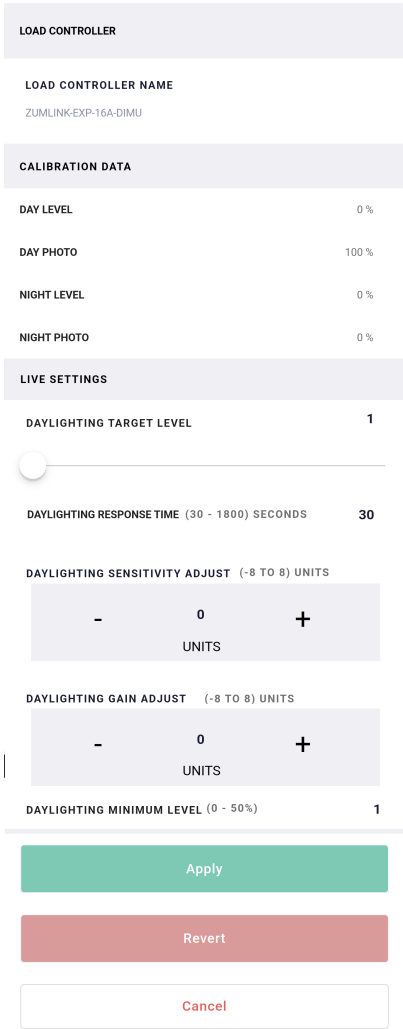

8. If adjustments were made to the load controller page, make sure to also click **Apply** on the **Daylighting Zone** page. To revert changes to the previous settings, click **Revert**. To exit the page without making any changes, click **Cancel**.

Load Controller Component

Navigate to the load controller component configuration page.

ZUMNET-JBOX-16A-LV, ZUMNET-JBOX-DALI, ZUMLINK-JBOX-16A-LV, and ZUMLINK-EXP-16A-DIMU

To configure the ZUMNET-JBOX-16A-LV, ZUMNET-JBOX-DALI, ZUMLINK-JBOX-16A-LV, and ZUMLINK-EXP-16A-DIMU load controller components:

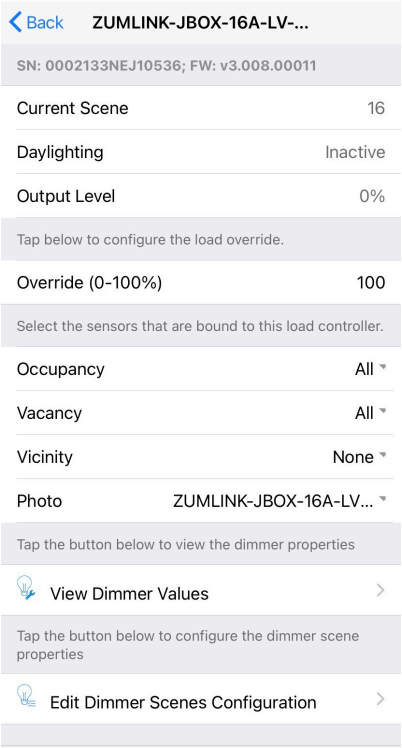

- Current Scene: States the current scene.
- Daylighting: States the Daylighting status.
- Output Level: States the light level detected.
- Override (0-100%): Set the light level for when override is initiated.
- Occupancy: Assign the occupancy mode to a chosen load controller.
- Vacancy: Assign the vacancy mode to a chosen load controller.
- Vicinity: Assign the vicinity mode to a chosen load controller.
- Photo: Assign the photo mode (daylight harvesting) to a chosen load controller.

- View Dimmer Values: Set the dimmer values.
  - Dim Level: States the dimming level set for day and night calibration.
  - Sensor Reading: States the sensor reading intensity for day and night calibration.
  - Output Level: Use the slider to adjust the Output level.
  - Min Level (0-45%): Set the minimum light level threshold a driver cannot pass.
  - Max Level (55-100%): Set the maximum light level threshold a driver cannot pass.
  - Fade Rate (0.25-10.00 secs): Set the amount of time it takes to raise the light level from 0% to 100% or dim the level from 100% to 0% when pressing the raise or lower buttons on a keypad.
  - Fade Time (0.25-30.00 secs): Set the amount of time to fade from the current light level to a recalled scene or discrete level.
  - On Fade Time (0.25-30.00 secs): Set the amount of time to fade from the current light level to the On scene.
  - Off Fade Time (0.25-30.00 secs): Set the amount of time to fade from the current light level to the Off scene.
- Edit Dimmer Scene Configurations. Tap on the value or move the sliders to configure levels for each scene. To exclude scenes from participating in the group, uncheck the box next to the scene.

Universal Dimmer Load Controller Advanced Properties

Use the Advanced Properties to change the phase and zero-cross settings.

1. Navigate to **View Dimmer Values** and tap to open the Dimming Properties.

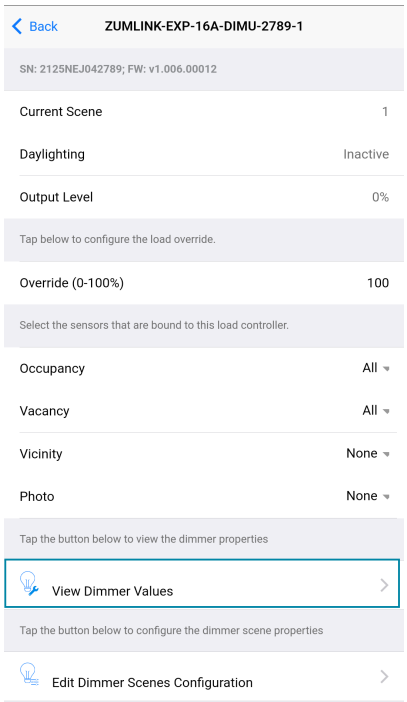

2. Select **Advanced** to open the Advanced Properties.

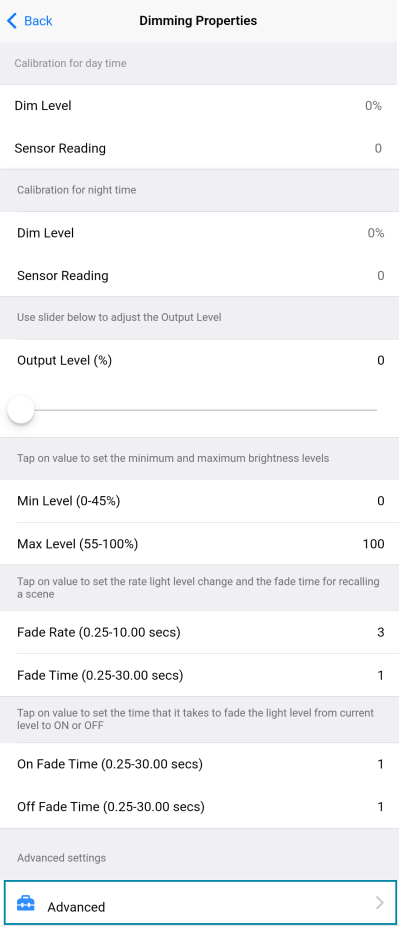

Set Phase

WARNINGS:

- Auto Dimming mode should not be disabled unless suggested by a Crestron True Blue Technical Support representative. Incorrectly setting these switches to force the wrong mode can cause damage to the dimmer and lighting fixture or create a hazardous condition.
- Only use Center Dimming mode if instructed by a Crestron True Blue Technical Support representative.

By default, **Auto** is selected. To change the phase:

1. Select the **SET PHASE** menu to open the options: **Forward**, **Reverse**, **Center**, and **Auto**.

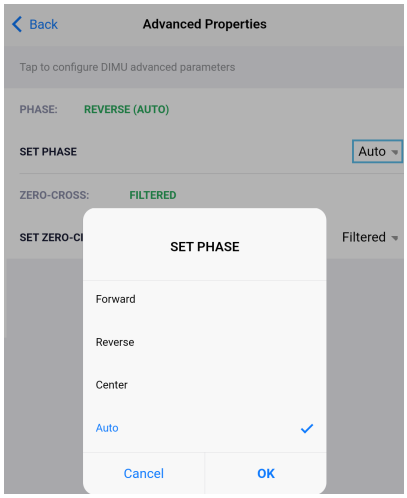

2. Select the desired option and select **OK**. The **REVERT** and **APPLY** options display.

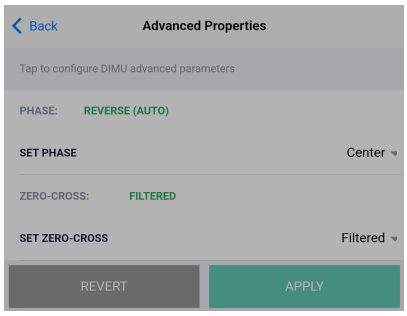

   a. Select **APPLY** to apply the change. The dimming performance warning displays requiring a confirmation to apply the change.

      Select **APPLY** to confirm and apply the change, or select **Cancel** to go back to the previous screen.

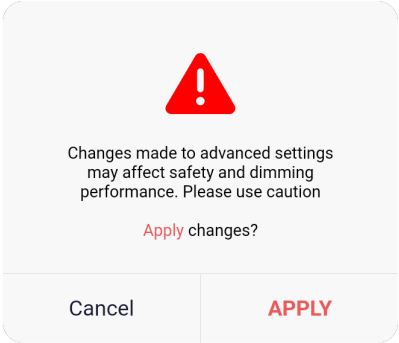

   b. Select **REVERT** to change the selection to the default or previously set phase.

NOTE: If the **Back** button is selected while changing the Advanced Properties settings, the following warning displays. Select **Leave** to leave without applying a change or **Stay** to apply the change.

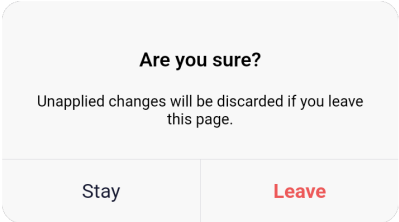

Set Zero-Cross

By default, **Filtered** is selected and is strongly recommended for best performance. To change the zero-cross.

1. Select the **SET ZERO-CROSS** menu to open the options: **Basic** and **Filtered**.

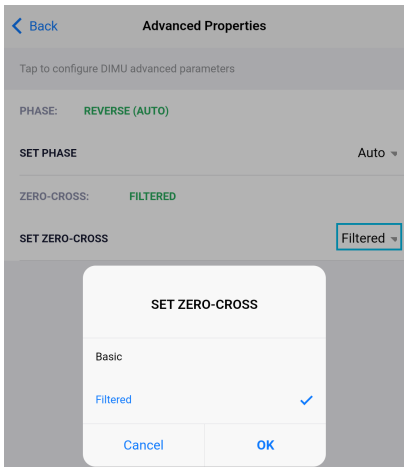

2. Select the desired option and select **OK**. The **REVERT** and **APPLY** options display.

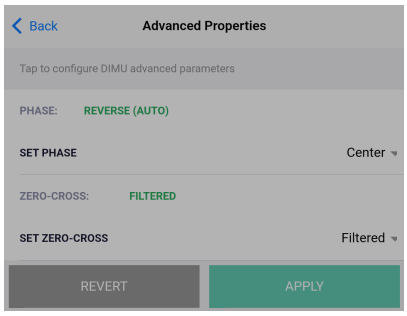

   a. Select **APPLY** to apply the change. The dimming performance warning displays requiring a confirmation to apply the change.

      Select **APPLY** to confirm and apply the change, or select **Cancel** to go back to the previous screen.

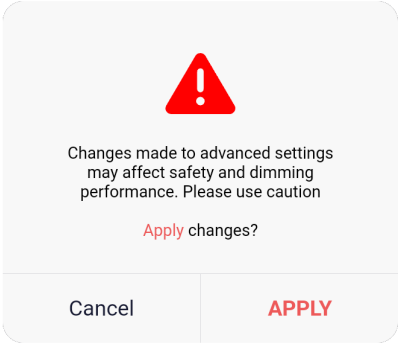

   b. Select **REVERT** to change the selection to the default or previously set option.

NOTE: If the **Back** button is selected while changing the Advanced Properties settings, the following warning displays. Select **Leave** to leave without applying a change or **Stay** to apply the change.

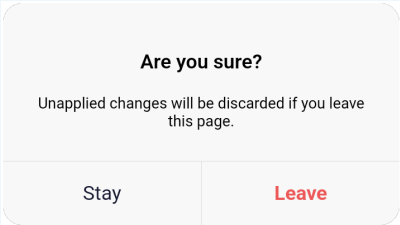

ZUMLINK-JBOX-20A-PLUG

To configure the ZUMLINK-JBOX-20A-PLUG load controller component:

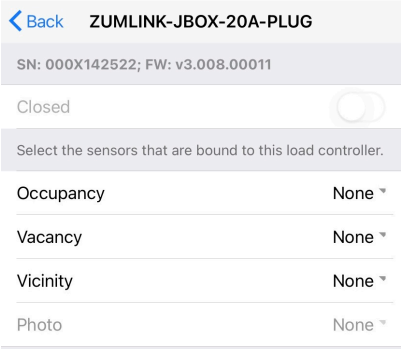

- Occupancy: Assign the occupancy mode to a chosen load controller.
- Vacancy: Assign the vacancy mode to a chosen load controller.
- Vicinity: Assign the vicinity mode to a chosen load controller.
- Photo: Assign the photo mode (daylight harvesting) to a chosen load controller.

ZUMLINK-JBOX-20A-SW

To configure the ZUMLINK-JBOX-20A-SW load controller component:

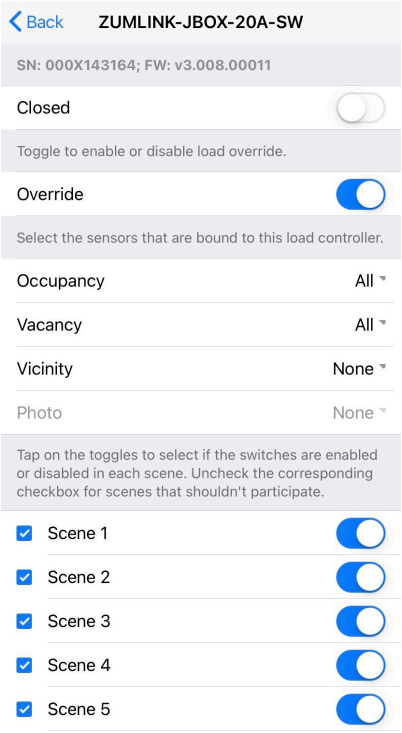

- Closed: Tap the toggle to turn the load on or off.
- Override: The state of the load when Override is recalled. Tap the toggle to turn the load on or off during Override.
- Occupancy: Assign the occupancy mode to a chosen load controller.

- Vacancy: Assign the vacancy mode to a chosen load controller.
- Vicinity: Assign the vicinity mode to a chosen load controller.
- Photo: Assign the photo mode (daylight harvesting) to a chosen load controller.
- Scenes: Allow keypad access to the scene by selecting or deselecting the checkbox. Determine the state of the load when the scene is recalled by clicking the toggle on or off.

DALI Load Controller Zūm App Commissioning

The following sections describe Zūm app commissioning for the ZUMNET-JBOX-DALI load controller.

Follow the required work flow for DALI commissioning of a DALI load controller:

1. Confirm Operating mode (Operating Mode on page 190)
2. Address drivers (Addressing on page 192)
3. Create DALI groups (Add a Group on page 194)

   > **NOTE:** For DALI Groups mode only. Broadcast mode does not use Groups. Refer to Operating Mode on page 190 for more information.

4. Assign drivers (Assign Drivers to a Group on page 193)

To begin the commissioning process, tap **DALI Controllers** in **Configuration**.

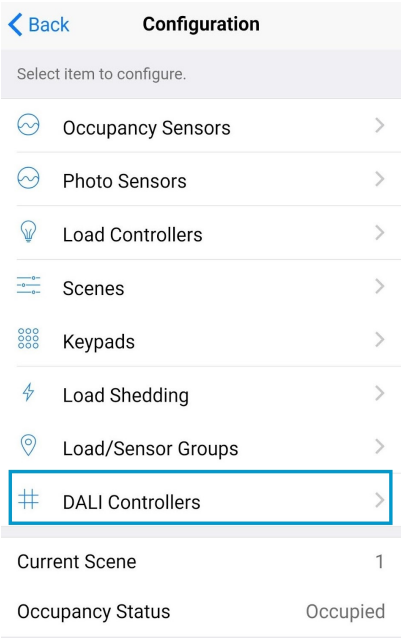

Tap the desired DALI controller to open the **DALI Commissioning** screen. The app may not respond until the system fully loads. The DALI Commissioning screen offers the following options:

- Addressing: Address all drivers and discover new drivers.
- Groups: Assign drivers to DALI groups and review DALI group assignments.

  > **NOTE:** For DALI Groups mode only. Broadcast mode does not use Groups. Refer to Operating Mode on page 190 for more information.

- Drivers: Edit drivers and review their status.
- Diagnostics: Start a diagnostics test and review results.
- Email system info report: Send an system report to an email address.

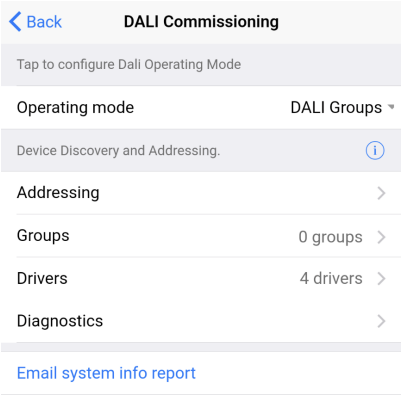

Operating Mode

DALI Commissioning operates in two modes: Broadcast or DALI Groups. In Broadcast mode, every device connected to the DALI load controller can be controlled in unison. In Groups mode, individual drivers can be placed in groups for granular control over the devices.

To confirm the room's operating mode:

1. Navigate to **Configuration** > **DALI Controllers** > **DALI Commissioning**
2. Review the DALI Commissioning screen.
   - If the Operating mode states **DALI Groups** or no operating mode is identified, then the DALI load controller is operating in DALI Groups mode.

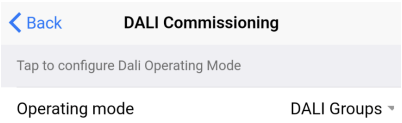

> **NOTE:** If **Operating mode** is not present on the **DALI Commissioning** screen, make sure to update to the latest firmware. Refer to Update Firmware with the Zūm App on page 160.

   - If the Operating mode states **Broadcast**, then the DALI load controller is operating in Broadcast mode.

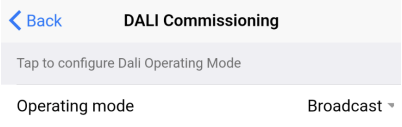

To change the Operating mode:

> **NOTE:** Changing the Operating mode affects keypad programming assignments. Review the assignments after implementing the change.

1. Tap the current Operating mode to open the Operating mode menu.

2. Select either **DALI Groups** or **Broadcast**.

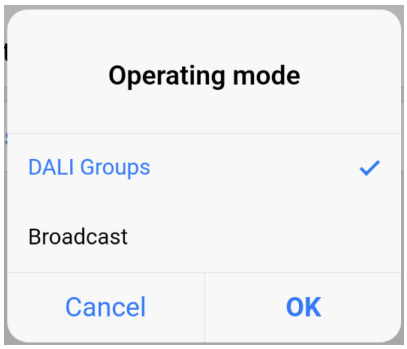

3. Tap **OK** to continue and a warning dialog opens.
4. Tap **Apply** to change the Operating mode or **Cancel** to close without making a change.

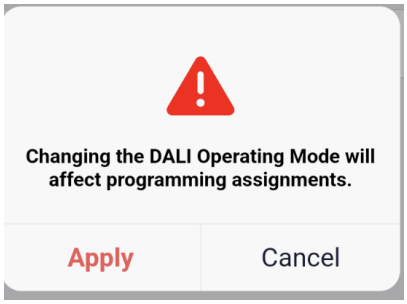

Addressing

Use **Addressing** to discover new drivers for a new or established system.

> **NOTE:** Addressing is required in DALI Groups Operating mode but is optional in Broadcast Operating mode.

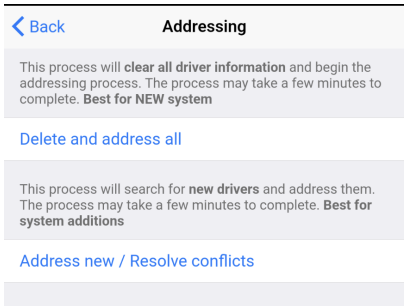

New Systems

Tap **Delete and Address All** to delete any driver information and begin the addressing process. When the confirmation window opens, tap **OK** to continue or **Cancel** to exit without readdressing the system.

Established Systems

Tap **Address New / Resolve Conflicts** to discover new drivers and add them to a system. Each driver must have a unique address. If there are duplicate addresses, resolve the conflict. When the confirmation window opens, tap **OK** to continue or **Cancel** to close without addressing the system.

Groups

Use **Groups** to assign drivers to a DALI group and review DALI group assignments.

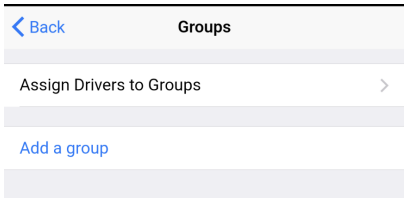

NOTES:

- For DALI Groups mode only. Broadcast mode does not use Groups. Refer to Operating Mode on page 190 for more information.
- DALI groups also appear as load controllers in **Configuration** > **Load Controllers**. The DALI groups are inactive until a DALI group has been created in **Groups**. DALI groups are not the same as load controller groups or occupancy sensor groups.

Assign Drivers to a Group

Tap **Assign Drivers** to assign a driver to a DALI group.

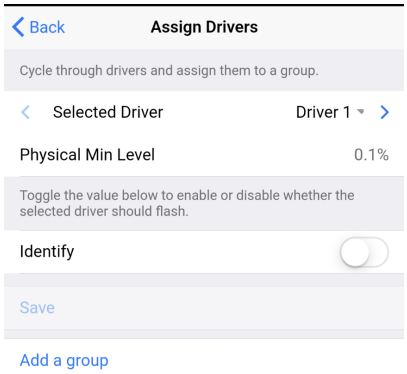

- Selected Driver: Choose a driver to assign. Tap < or > to cycle through the drivers. The Physical Min Level is stated.

  The Physical Min Level is the actual level (%) the driver is capable of lowering to. Only Drivers with the same Physical Min Level should be added to the same DALI group.
- Identify: Tap the toggle to enable or disable whether the selected driver should flash.
- DALI groups: Tap the check box next to the desired DALI group. Tap **Save** to save the changes or tap **Back** to return to the previous screen without saving.
- Add a group: Opens the same screen as Add a Group on page 194.

Add a Group

Tap **Save** to save the DALI group.

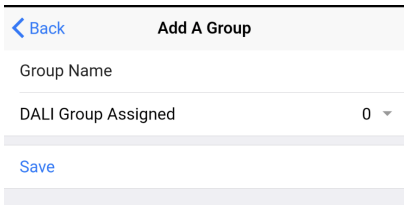

The previous screen appears with the new DALI group listed under Group Assignments.

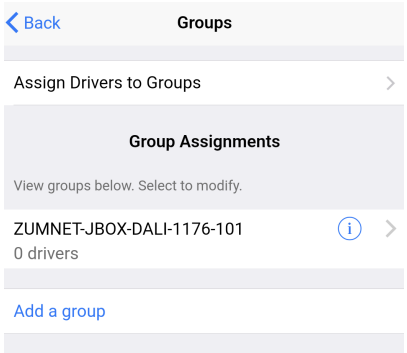

Group Assignments

Created DALI groups are listed under Group Assignments. To flash drivers, tap the Identify icon ⓘ next to **Drivers in group** to flash all drivers in the group or next to a driver to identify a single driver.

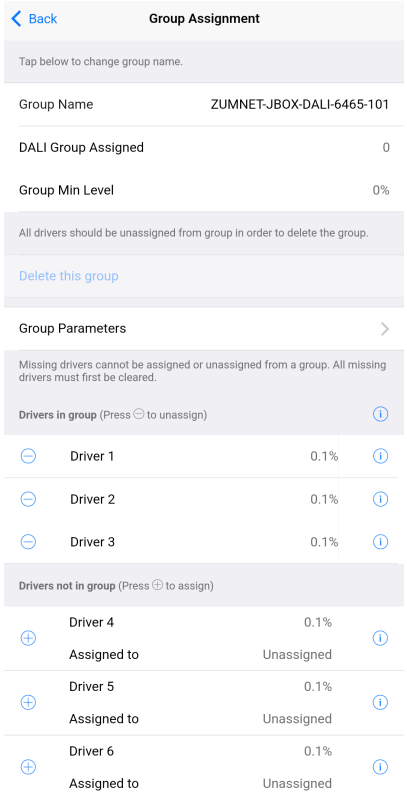

- Group Name: Tap to edit the DALI group name.

  After editing the Group Name, save the new name by tapping the go or enter button on your phone's keyboard or tapping outside of the Group Name field.
- DALI Group Assigned: Displays the group number of the DALI group.
- Group Min Level: Displays the value set in View Dimming Properties > Min Level (0-45%).
- Delete this Group: Tap to delete the DALI group.

  Delete this Group is only enabled after all drivers are removed from the group.

- Group Parameters: Tap to access the Group Parameters.

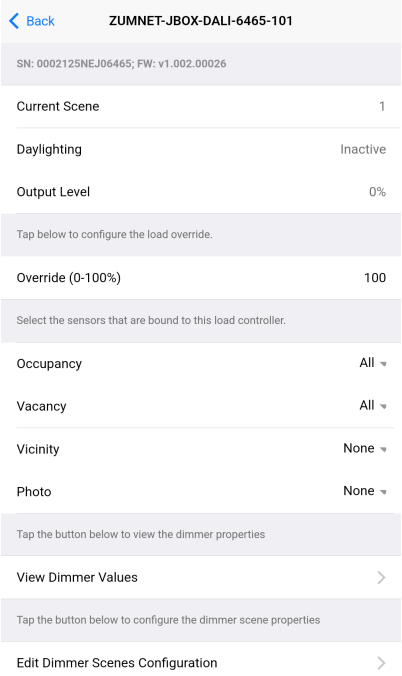

  - Current scene
  - Daylighting
  - Output Level
  - Override
  - Occupancy
  - Vacancy
  - Vicinity
  - Photo

- View Dimmer Values

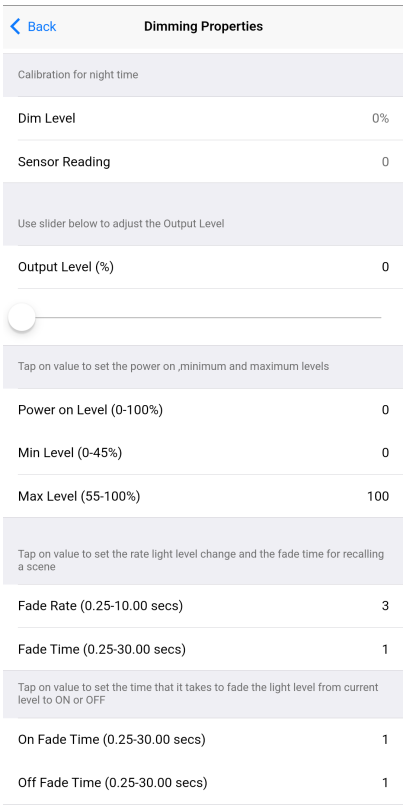

  - Dim Level: Review the dimming level set for day and night calibration.
  - Sensor Reading: Review the sensor reading intensity for day and night calibration.
  - Output Level: Use the slider to adjust the Output level.
  - Power on Level (0-100%): Set the light level when powering On.
  - Min Level (0-45%): Set the minimum light level threshold a driver cannot pass.
  - Max Level (55-100%): Set the maximum light level threshold a driver cannot pass.
  - Fade Rate (0.25-10.00 secs): Set the amount of time it takes to raise the light level from 0% to 100% or dim the level from 100% to 0% when pressing the raise or lower buttons on a keypad.
  - Fade Time (0.25-30.00 secs): Set the amount of time to fade from the current light level to a recalled scene or discrete level.
  - On Fade Time (0.25-30.00 secs): Set the amount of time to fade from the current light level to the On scene.
  - Off Fade Time (0.25-30.00 secs): Set the amount of time to fade from the current light level to the Off scene.
- Edit Dimmer Scene Configurations. Tap on the value or move the sliders to configure levels for each scene. To exclude scenes from participating in the group, uncheck the box next to the scene.

- **Drivers in group** and **Drivers not in group**: Tap **+** to add a driver to the DALI group or tap **-** to remove a driver from the DALI group.

Drivers

Use the Drivers screen to review the Drivers List.

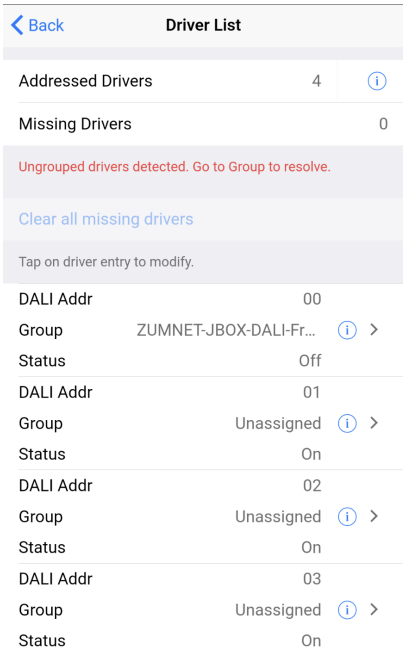

- Addressed Drivers: States the number of drivers addressed.
- Missing Drivers: States the number of drivers missing. Missing drivers are drivers that were previously addressed but currently can not be found.

  The Status is displayed as Missing in red to indicate which driver needs to be checked.
- If drivers have been addressed but not assigned to a DALI group, the message "Unassigned drivers detected. Go to Groups to resolve." appears. Drivers must be assigned to a DALI group before they can be controlled.
- If missing drivers are detected, **Clear all missing drivers** is active. Tap **Clear all missing drivers** to delete the addressed information. Return to **Addressing** and tap **Address New / Resolve Conflicts**.
- Drivers listed: Each listed driver states the DALI Address number (00-63), the Group name or Unassigned, and the Status (On, Off, or Missing).

  Tap the Identify icon ⓘ. The drivers flash, identifying the driver.

  Tap on the driver to access the Driver Setting.
  - Review **Driver details** such as DALI Address, Long Address, Physical Min Level, Driver Type, and Status.
  - Change the DALI Address. Chose a number 00-63 and tap **Save** to save the new address. Only available addresses can be selected. Addresses already assigned to another driver are grayed out and cannot be selected.
  - Review the name of the group the driver is assigned to and the Min Level Set.
  - Tap Grouping to access **Assign Drivers**. The same screen as Load Controllers Zūm App Configuration on page 166 opens.

Diagnostics

Use the Diagnostics screen to test the DALI loop for the selected DALI controller.

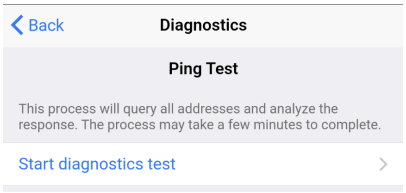

Tap **Start diagnostics test** to begin a Ping Test. The test pings each driver ten times to trigger a response and report the following data:

- Status of bus voltage
- Number of drivers that passed
- Number of drivers that failed
- Presence of unassigned drivers

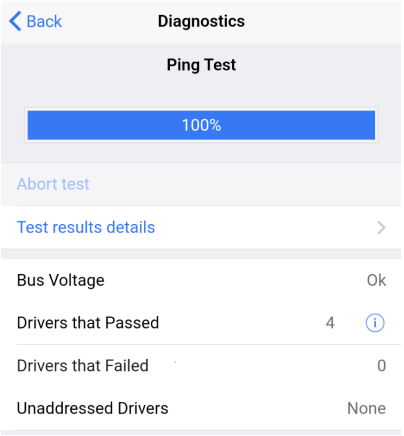

Tap **Test result details** to view the driver address and how many times out of 10 the driver did not respond to a ping.

Back **Diagnostics**

DALI Addr	07	✓
DALI Addr	08	✓
DALI Addr	09	✓
DALI Addr	10	✓
DALI Addr	11	✓
DALI Addr	12	✓
DALI Addr	13	✓
DALI Addr	14	✓
DALI Addr	15	ⓘ
No Response	10/10	
DALI Addr	16	ⓘ
No Response	10/10	
DALI Addr	17	ⓘ
No Response	10/10	
DALI Addr	18	ⓘ
No Response	10/10	
DALI Addr	19	ⓘ
No Response	10/10	

Keypad Zūm App Configuration

The following sections describe Zūm app configuration for keypads.

Navigating the Configuration Screens

There are two ways to access the configuration pages from the Main screen.

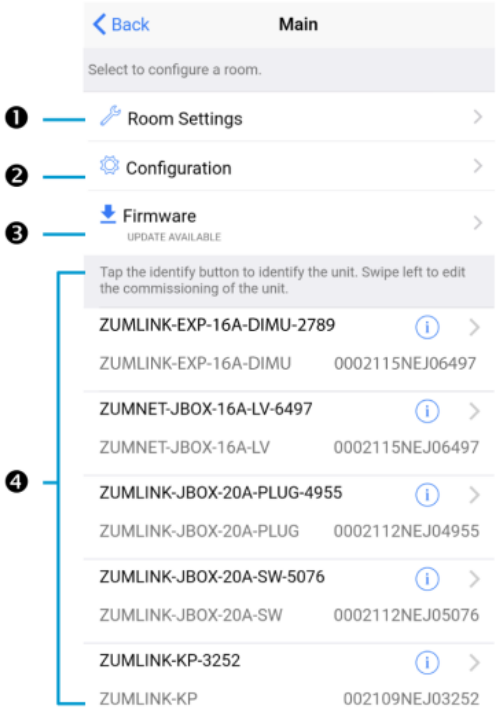

View All Keypads

To view all keypads:

1. Tap on **Configuration** (number 2 in the image above).
2. Tap **Keypads**.

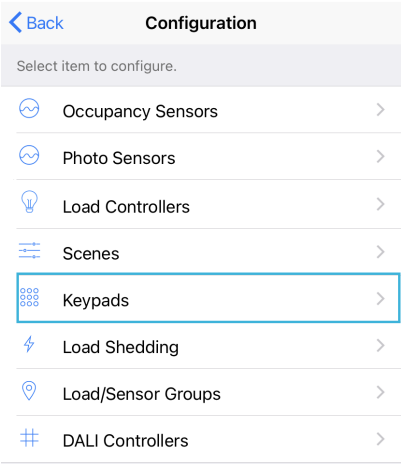

3. Tap the desired keypad to begin the configuration.

> **NOTE:** Tap the Identify icon ⓘ to identify a device. A keypad flashes its LED.

4. (Optional) Tap in the Name field to edit the keypad name.

View an Individual Keypad

To view an individual keypad:

1. Tap on the keypad in the list of devices (number 4 in the image above) to view information about the keypad.
2. (Optional) Tap in the **Name** field to edit the keypad name.
3. Tap on the keypad to begin the configuration.

> **NOTE:** Tap the Identify icon ⓘ to identify a device. A keypad flashes its LED.

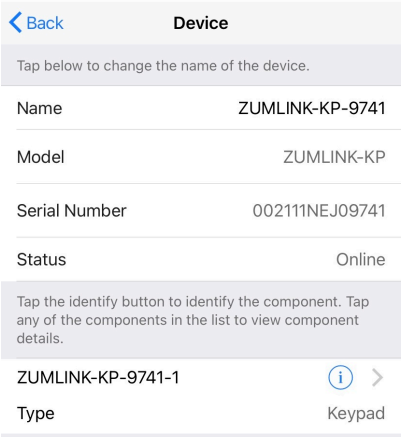

Configure a Keypad

Navigate to the keypad's configuration page.

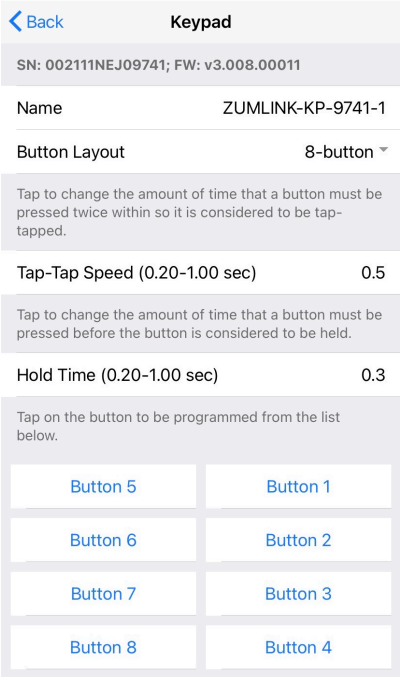

- Name: Tap in the Name field to edit the keypad name.
- Button Layout: Select not specified, Rocker, 2-button, 4-button, 6-button, or 8-button.

  > **NOTE:** When a layout other than "not specified" is selected, the button layout displays at the bottom of the page.

- Tap-Tap Speed (0.20-1.00 sec): Set the amount of time between two button presses to qualify as a double tap.
- Hold Time (0.20-1.00 sec): Set the amount of time that a button must be pressed to be considered a hold.
- Buttons: Tap on a button to program it.

Program Buttons

Program buttons and button actions.

- Tap the button in the layout to program a button.

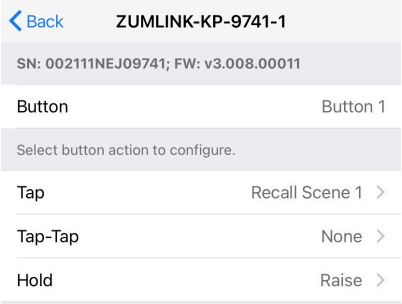

- Select events for the actions Tap, Tap-Tap, and Hold.

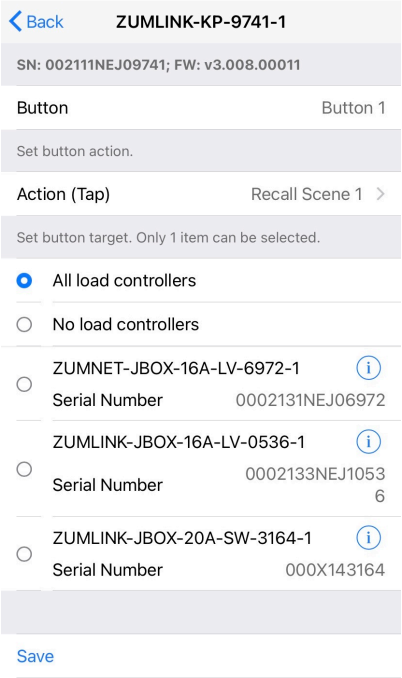

  - Button: Button Name.
  - Action: Set the button action.
    - None
    - Off: Assigned load controllers turn off.
    - On: Assigned loads turn on.
    - Raise (for Hold action): Assigned load controllers raise.
    - Lower (for Hold action): Assigned load controllers lower.
    - Toggle: Switches load controllers between ON and OFF states.
    - Recall Scene 1 - Scene 16: Assigned load controllers recall the behavior set for the specified scene.
    - Export to Hub: Name and send information to ZUM-HUB4 for macro actions.
  - Load Controllers: Select the affected load controller.

    > **NOTE:** Only one load controller can be selected.

  - Save: Save changes.

Presence Detectors Zūm App Configuration

The following sections describe Zūm app configuration for Zūm presence detectors. Models with the additional low-voltage relays (-RLY) have a load controller component. Load controller functionality is not natively programmed; all load controller functionality must be configured.

Navigating the Configuration Screens

All presence detectors have an occupancy sensor and a photo sensor component. Presence detectors with the additional relays (-RLY models) have two components: the occupancy sensor and a load controller. Each component is configurable and there are two ways of accessing the configuration pages from the Main screen.

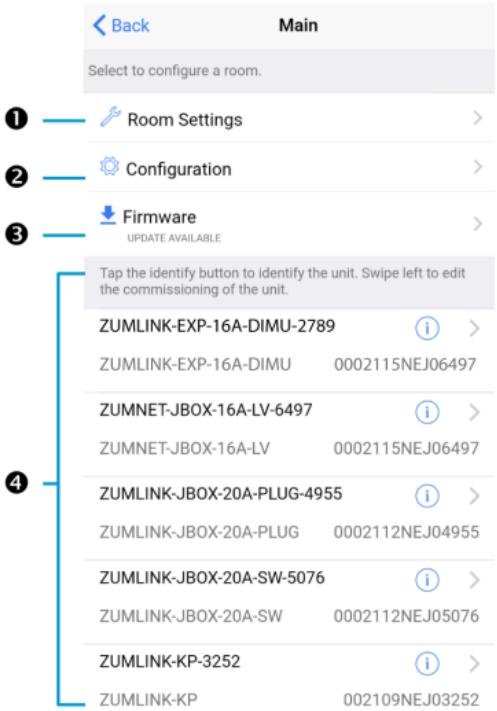

View Individual Components by Type

To view individual components by type:

1. Tap on **Configuration** (number 2 in the image above).
2. Tap the desired component category: **Photo Sensors**, **Occupancy Sensors**, or **Load Controllers**.

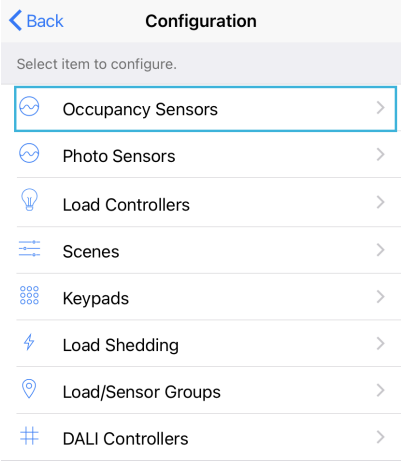

3. Tap the desired component to begin the configuration.

> **NOTE:** Tap the Identify icon ⓘ to identify a device. A presence detector flashes its LED.

View a Presence Detector and Its Components

To view a presence detector and its components:

1. Tap on the presence detector in the list of devices (number 4 in the image above) to view information about the presence detector.
2. (Optional) Tap in the **Name** field to edit the presence detector name.
3. Tap on the desired component to begin the configuration.

> **NOTE:** Tap the Identify icon ⓘ to identify a device. A presence detector flashes its LED.

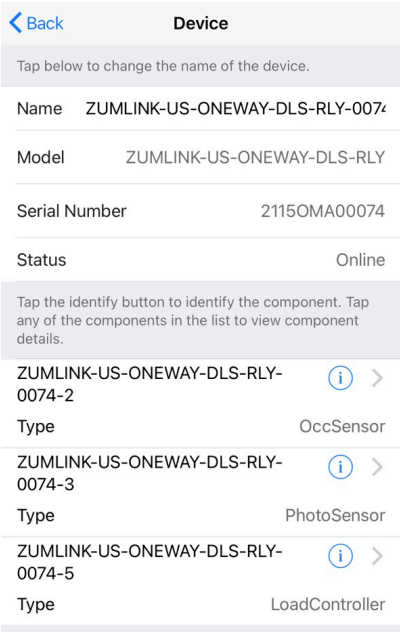

Occupancy Sensor Component

Navigate to the OccSensor component configuration page for the presence detector.

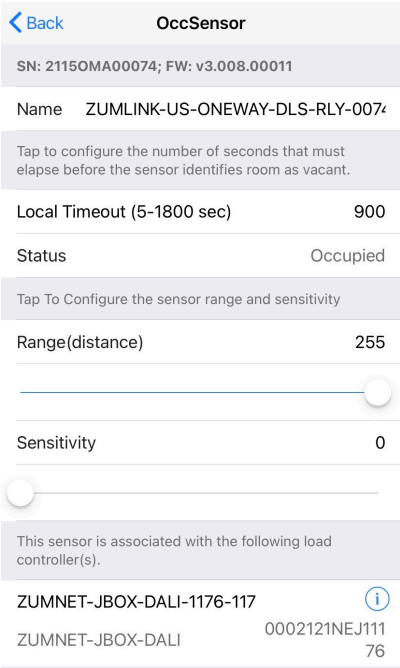

- Name: Edit the name of the photo sensor component.
- Local Timeout (5-1800 sec): Set the duration of time the sensor must wait before designating a room as vacant.
- Range: Use the slider to adjust the detection range.
- Sensitivity: Use the slider to adjust the sensitivity.
- List of load controllers associated with the occupancy sensor component.

> **NOTE:** Tap the Identify icon ⓘ to identify a device. A presence detector flashes its LED.

Photo Sensor Component

Navigate to the PhotoSensor component configuration page for the presence detector.

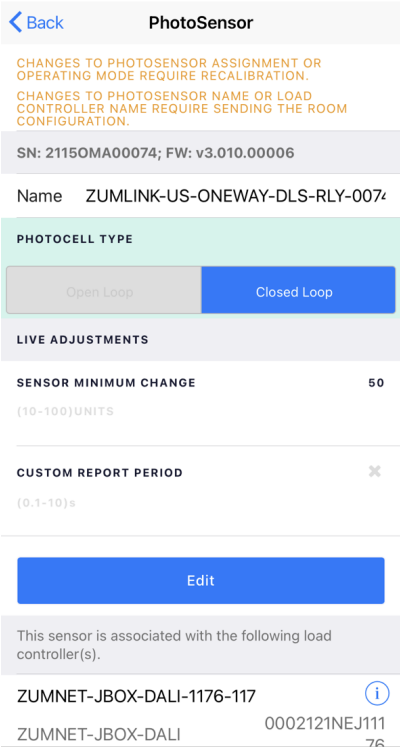

- **Name:** Click in the Name field to edit the name of the photo sensor component.
- **Photocell Type:** Choose **Closed Loop** or **Open Loop** mode.

> **NOTES:** Zūm Link presence detectors only have **Closed Loop** mode. Analog sensors connected to a load controller can function in **Closed Loop** or **Open Loop** mode.
>
> - Open-Loop mode senses natural light.
> - Closed-Loop mode senses natural and artificial light.

- **Live Adjustments:** Click **Edit** to make live adjustments to the **Sensor Minimum Change** or the **Custom Report Period**. If any changes are made, click **Apply** to save and return to the **PhotoSensor** page.
    - **Sensor Minimum Change (1-65535) UNITS:** The minimum amount of light level change detected by the photosensor before it sends data back to the load controller.

      > **NOTE:** Sensor Minimum Change range for Closed-Loop mode is (10-100) Units.

    - **Custom Report Period (0.1 - 10) s:** Set how frequently photosensor light reading data is sent. This overrides any Closed-Loop or Open-Loop mode default settings.

  > **CAUTIONS:**
  > - Calibrate daylighting before making any live adjustments. For details, refer to Calibrate Daylighting Settings on page 170.
  > - Make live adjustments during daylight hours.

- List of load controllers associated with the photo sensor component.

Load Controller Component

Navigate to the load controller component configuration page for the desired presence detector.

> **NOTE:** Applicable for ZUMLINK-IR-QUATTRO-DLS-RLY, ZUMLINK-DT-QUATTRO-DLS-RLY, ZUMLINK-US-QUATTRO-DLS-RLY, ZUMLINK-IR-QUATTRO-HD-DLS-RLY, ZUMLINK-US-HALLWAY-DLS-RLY, and ZUMLINK-US-ONEWAY-DLS-RLY models.

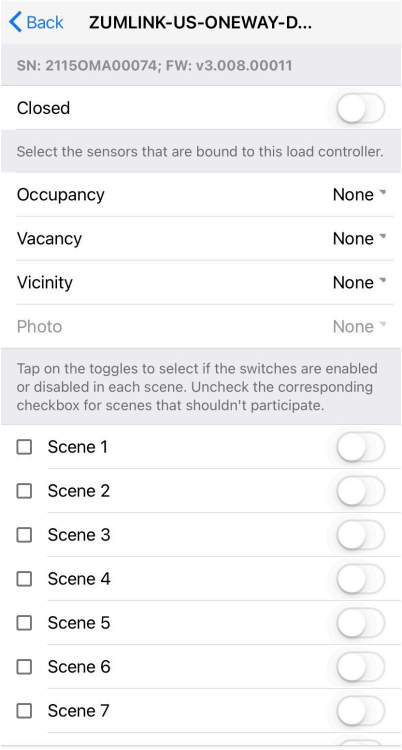

- Closed: Tap the toggle for closed-loop sensing.
- Occupancy: Assign the occupancy mode to a chosen load controller.
- Vacancy: Assign the vacancy mode to a chosen load controller.
- Vicinity: Assign the vicinity mode to a chosen load controller.
- Scenes: Tap the toggle to enable or disable the switch in each scene. Uncheck the corresponding box for scenes that should not participate.

Sensor Test Mode

Use **Sensor Test Mode** to view a presence detector's status, and easily edit a presence detector's settings after they are installed. To access the Sensor Test Mode from the Zūm app Main Screen, tap **Configuration** and tap **Occupancy Sensors**. A list of occupancy sensor components displays, including the occupancy sensor components for load controllers and presence detectors.

In this example, the occupancy sensor component for the presence detector is the ZUMLINK-US-ONEWAY-DLS-RLY-0074-2. The other occupancy sensors listed are for load controllers.

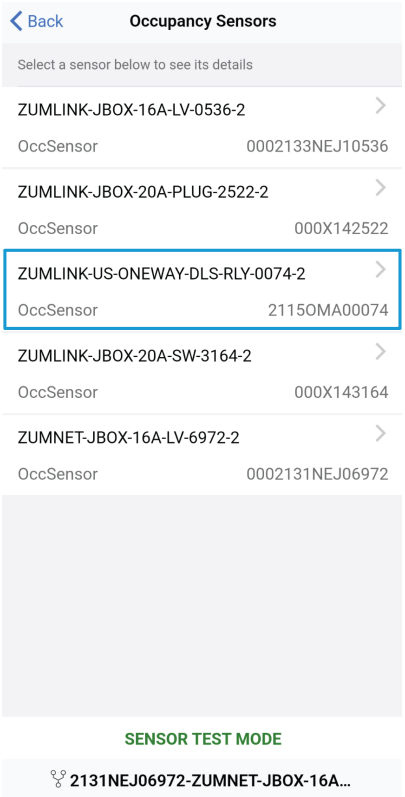

To enter test mode, tap **Sensor Test Mode** at the bottom of the screen. The same list of sensors displays. To exit test mode, tap **Stop Test Mode**.

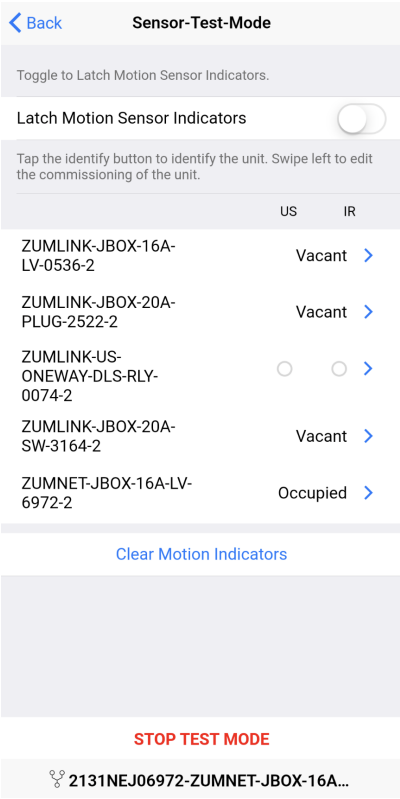

Sensor Test Mode allows users to view real-time status and US and PIR sensor technology feedback. This screen enables users to make adjustments and confirm the expected detection sensitivities. For presence detectors, the radio button indicates whether the Ultrasonic or Infrared technology triggered. For non-system presence detectors, the room status is identified as Occupied or Vacant.

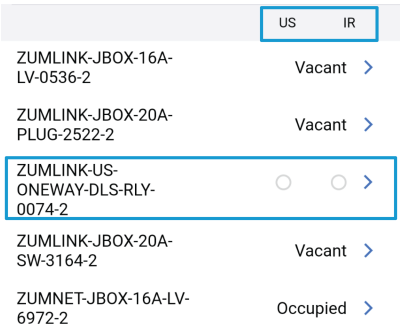

Tap > next to the presence detector to adjust the Name, Timeout, Range, and Sensitivity, as well as review the room Status and connected loads. Refer to Adjust Ultrasonic Sensitivity on page 213 for best practices on adjusting sensitivity.

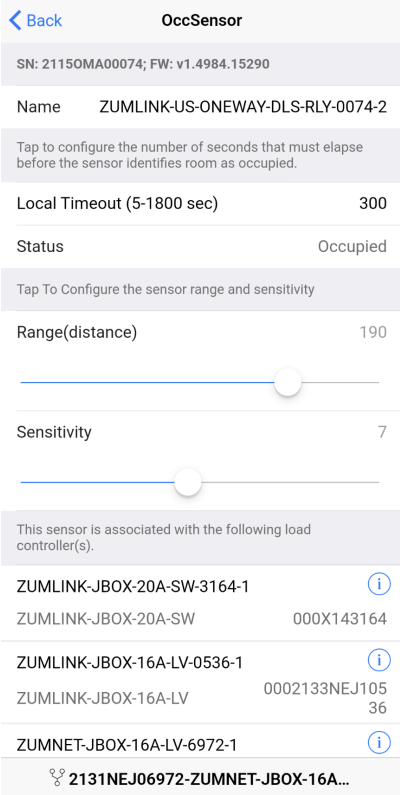

Adjust Ultrasonic Sensitivity

You can adjust the Ultrasonic (US) sensitivity in US and Dual Technology (DT) presence detectors. Passive Infrared (PIR) sensitivity is fixed and cannot be adjusted in PIR or DT presence detectors.

1. Occupy the space where the US or DT presence detector is installed, and access Sensor Test Mode in the Zūm app. Refer to Sensor Test Mode on page 211.
2. In the Zūm app, locate the desired presence detector(s) in the list and tap **Sensor Test Mode** to begin the test.

3. Move around the room and observe the behavior of the US and IR radio buttons.

> **NOTE:** The radio buttons light momentarily to identify the presence detector and technology triggered. Use the **Latch Motion Sensor Indicators** toggle to retain the radio button with the last motion detected. The **Clear Motion Indicator** button resets the radio buttons.

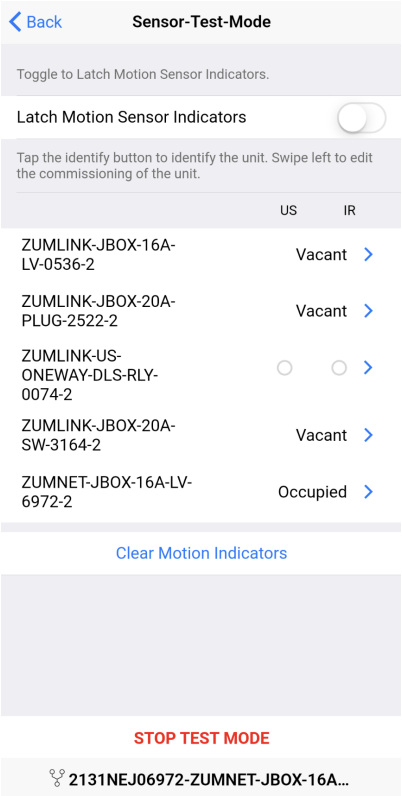

4. If the presence detector does not trigger enough or triggers too much, press > next to the presence detector to make adjustments to the sensitivity.

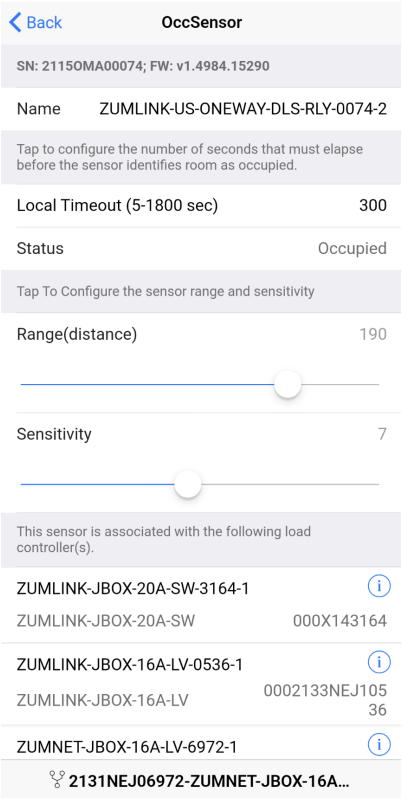

5. Move the Sensitivity or Range slider to the desired position.
6. To test the new setting, click < Back to return to Sensor Test Mode.
7. Repeat the process from step 3 until the desired sensitivity is attained.

Hub Web Interface

The ZUM-HUB4 is configured using the web interface. Connect to the device by entering the device hostname into a web browser. The hostname is comprised of "ZUM-HUB4-" followed by the entire MAC address (e.g., ZUM-HUB4-00107FCA1112)"ZUM-FL-" and the last 8 digits of the MAC address (e.g., ZUM-FL-7F8764BF). The **New User Registration** screen is displayed during the first connection. Enter the user's **Username**, **Password**, **Firstname**, **Lastname**, and **Email Address**, and then click **Submit**.

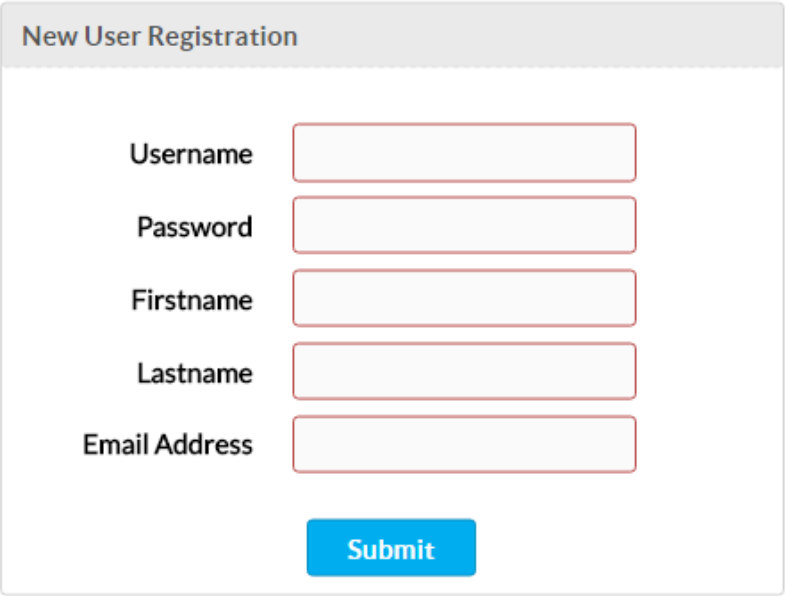

Web Interface Overview

The web interface gives users the ability to configure room behavior globally across the ZUM-HUB4, by Room Category, by Floor, and by Room.

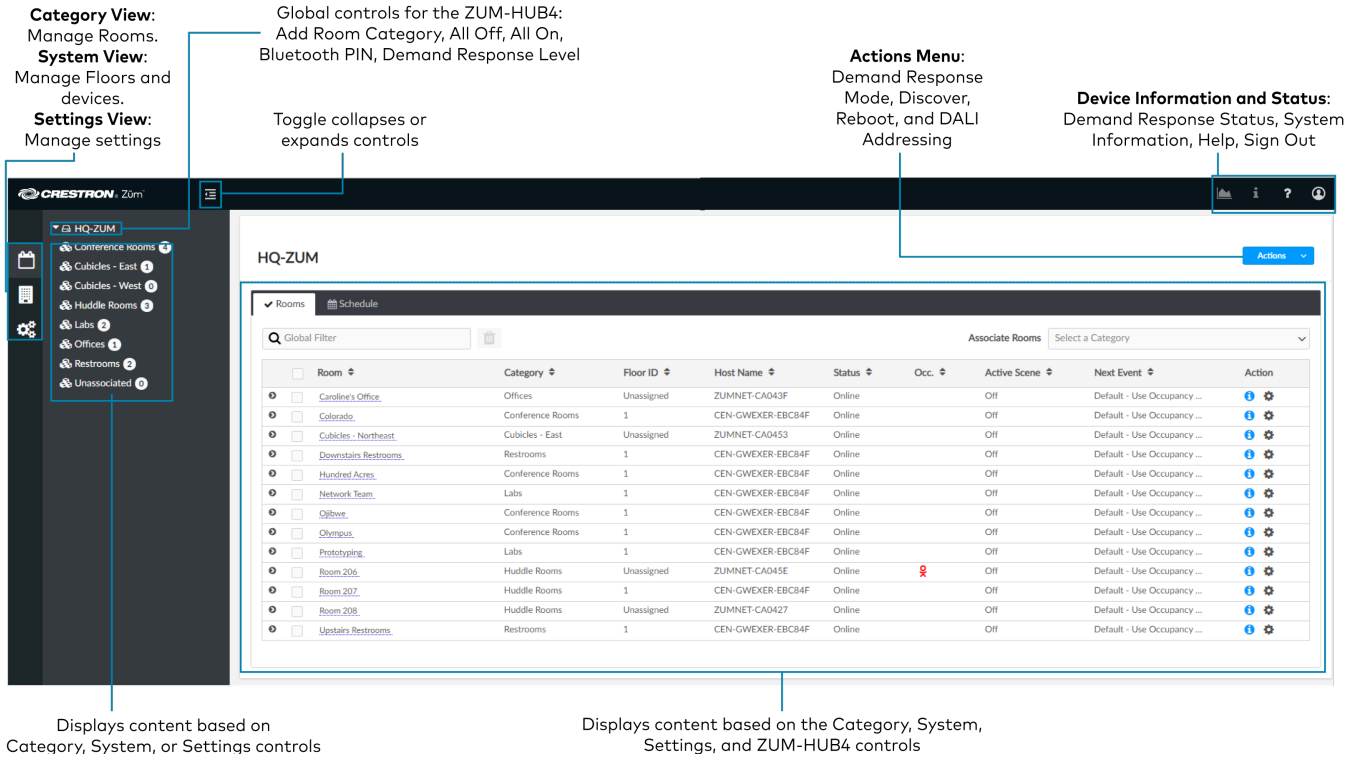

Category View, System View, and Settings View

The web interface has three configuration sections: Category View to manage Rooms, System View to manage Floors and devices, and Settings View to manage settings.

Category View

System View

Settings View

Category View

The Category View lists room categories and rooms (in the **Rooms** tab) that have been discovered by the ZUM-HUB4. Room Categories are intended to be groupings of all rooms that are a similar type (for example, office or conference rooms) to provide easy monitoring and control. Rooms that have not been assigned to a Room Category are kept in the **Unassociated** category. Select the **Schedule** tab to edit default behavior for Day Patterns, Room States and Holidays.

- Manage Rooms on page 234
- Manage Room Categories
- Set the Bluetooth PIN on page 228

- Configure the Demand Response Mode and Level on page 230
- Schedule Room Behavior on page 239

System View

The System View lists Floors and rooms (in the **Rooms** tab) that are discovered by the ZUM-HUB4. Use the Hardware Management tab to view and edit device information, such as assigning a device to a floor.

- Manage Floors on page 247
- Set the Bluetooth PIN for a Floor on page 229
- Set the Demand Response Level for a Floor on page 232
- Manage Devices on page 248

Settings View

The Settings View manages the settings for the ZUM-HUB4, Users, External Control, and Commissioning. The Settings tab is open by default.

- Manage Settings on page 252
- Manage Users on page 255
- Manage External Controls on page 257
- Manage Commissioning on page 260

Global Settings and Actions for the ZUM-HUB4

Apply settings that effect all devices discovered by the ZUM-HUB4 regardless of the room, room category, or floor the device is assigned.

ZUM-HUB4 actions:

- Configure Demand Response Mode on page 230
- Discover Rooms on page 221
- Reboot ZUM-HUB4 on page 265
- DALI Addressing on page 222

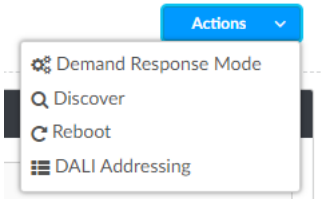

ZUM-HUB4 controls:

- Add a Room Category
- Turn On/Off All Discovered Devices on page 226
- Set the Bluetooth PIN for All Discovered Devices on page 228
- Set the Demand Response Level for All Discovered Devices on page 231

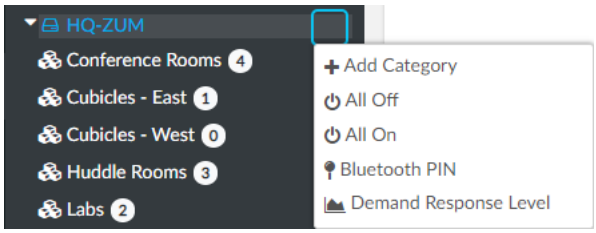

Navigation Toggle

Click to collapse or the Category View, System View, Setting Views, and the global ZUM-HUB4 settings.

Device Information and Status

View the Demand Response status, system alerts, help information, or sign out of the web interface. Refer to Review Device Information and Status on page 263.

Web Interface Configuration

After using the Zūm app to setup Zūm spaces and logging into web interface, configure the ZUM-HUB4:

Related topics:

- Zūm App Configuration on page 159
- Hub Web Interface on page 216

Discover Rooms

To discover rooms:

1. Click the **Actions** menu

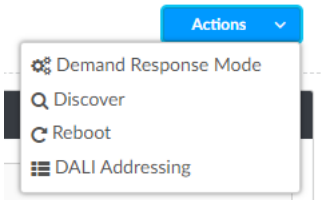

2. Click **Discover**. The Discover window opens.
3. Select the type of rooms you want to discover.
4. Click **Discover** to Discover rooms or close the window.

   During the discover process, a **Stop** button displays as an option to stop discovering.

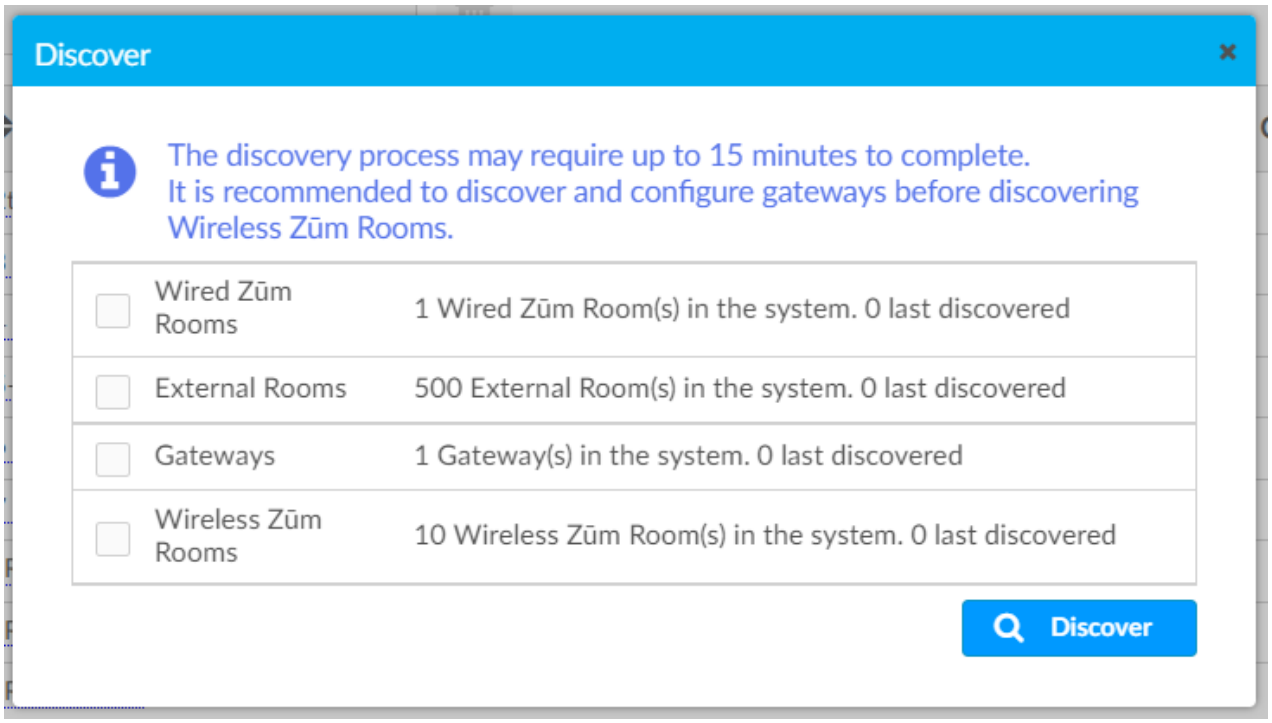

DALI Addressing

To discover rooms:

1. Click the **Actions** menu

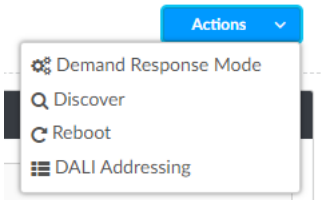

2. Click **DALI Addressing**. The DALI Addressing window opens.

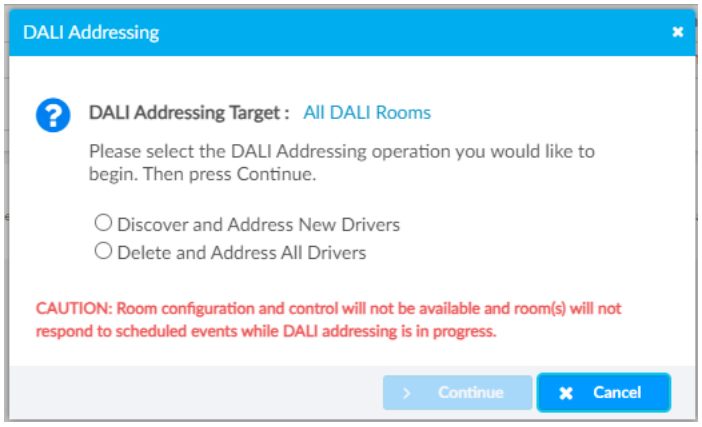

3. Select the desired operation and click **Continue**. A confirmation window opens.

> **CAUTION:** Room configuration and control will not be available and room(s) will not respond to scheduled events while DALI addressing is in progress.

   - Discover and Address New Drivers
   - Delete and Address All Drivers

4. Click **Yes** to continue or **No** to go back to the DALI Addressing window.

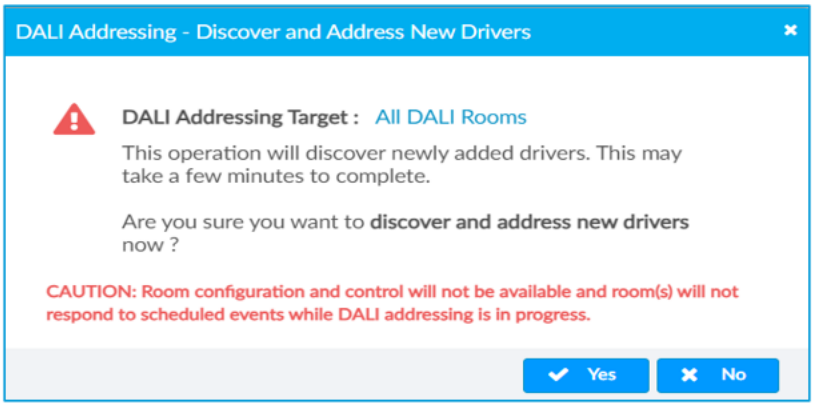

5. When addressing is complete, click **Close**. DALI rooms will reboot. During the reboot, the rooms will not be accessible on the Zūm app.

> **NOTE:** Any errors in DALI Addressing are reported in **System Information**. For more information, refer to Review Device Information and Status on page 263.

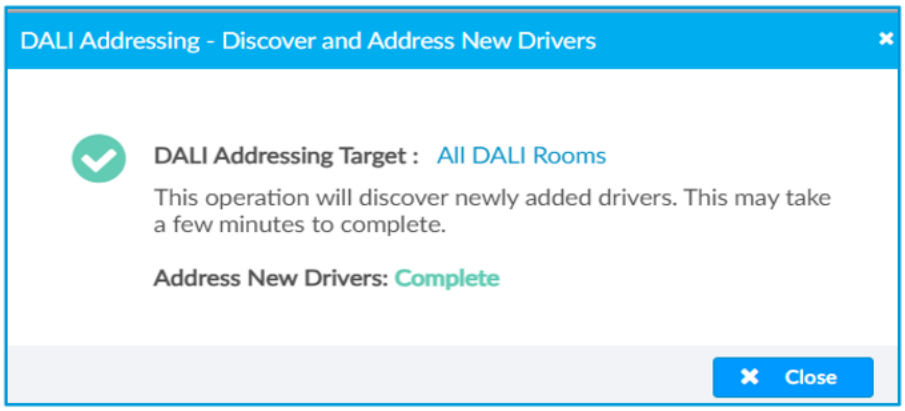

Add a Room Category

To create a room category:

1. Click the menu beside the ZUM-HUB4.

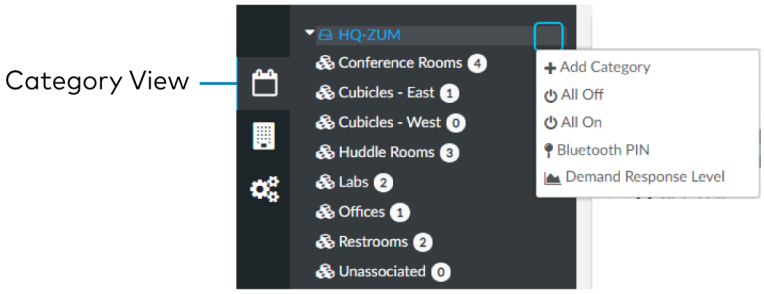

2. Click **Add Category**.
3. Type the name of the Room Category.
4. Click ✔ to save the Room Category or ✖ to cancel.

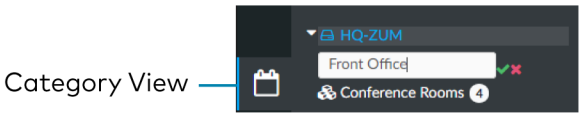

For more information about Room Categories, refer to Manage Room Categories.

Rename a Room Category

Room Category names can be renamed to provide a clear description of the connected rooms. To rename the Room Category name:

1. Click the menu beside the Room Category name.

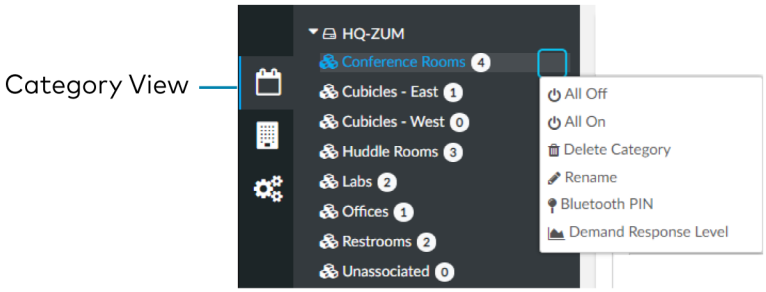

2. Click **Rename**.
3. Click ✔ to save the Room Category or ✖ to cancel.

For more information about Room Categories, refer to Manage Room Categories.

Turn Rooms On or Off

Control a room by turning on/off the all rooms, all rooms in a Room Category, all rooms on a Floor, or by choosing a lighting scene for a specific room.

This section provides the following information:

Turn On/Off All Discovered Devices

To turn all devices on/off:

1. Open the **Category View**.
2. Click the menu beside the ZUM-HUB4.
3. Click **All Off** or **All On**.

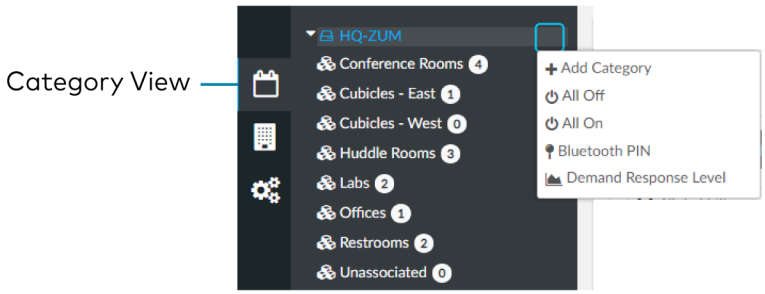

Turn On/Off a Room Category

To turn all devices on/off in a Room Category:

1. Open the **Category View**.
2. Click the menu beside the Room Category name.
3. Click **All Off** or **All On**.

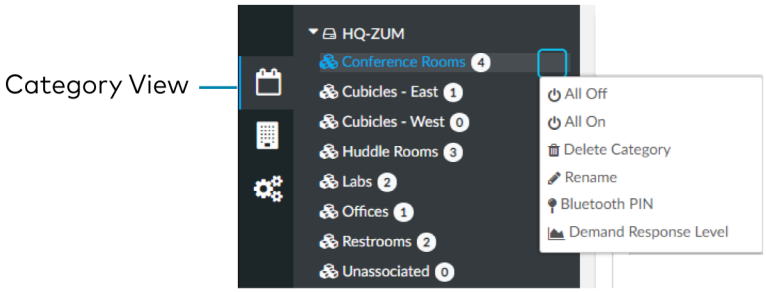

Turn On/Off a Floor

To turn all devices on/off on a Floor:

1. Open the **System View**
2. Click the menu beside the Floor name.

3. Click **All Off** or **All On**.

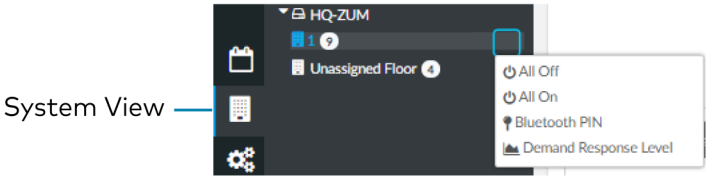

Turn On/Off a Room

You can turn a specific room on/off using the Control Room window, but this option provides more detailed settings. Refer to Control Devices in a Room on page 237.

Set the Bluetooth PIN

The Bluetooth PIN enables a mobile device with the Zūm app to connect to the Zūm Wired Keypad or the Zūm Network Bridge. The Bluetooth PIN can be set for all discovered devices, all devices in a Room Category, all devices on a Floor, or all devices in a Room.

> **NOTES:**
>
> - Once a Bluetooth PIN is set for a device, it remains until manually changed. For example, if a device moves to a different room or floor, the Bluetooth PIN does not automatically inherit the PIN set for the new location. The device keeps the PIN previously set.
> - For Primary load controllers running firmware 3.6.18 and higher, the default PIN is 246800. For firmware lower than 3.6.18, the default PIN is 2468.

This section provides the following information:

- Set the Bluetooth PIN for All Discovered Devices on page 228
- Set the Bluetooth PIN for a Room Category on page 228
- Set the Bluetooth PIN for a Room on page 229
- Set the Bluetooth PIN for a Floor on page 229

Set the Bluetooth PIN for All Discovered Devices

To set the Bluetooth PIN for all devices:

1. Open the **Category View**.
2. Click the menu beside the ZUM-HUB4.
3. Click **Bluetooth PIN**.
4. Set the PIN (0 to 9999).

5. Click ✔ to save or ✖ to cancel.

Set the Bluetooth PIN for a Room Category

To set the Bluetooth PIN for devices in a Room Category:

1. Open the **Category View**.
2. Click the menu beside the Room Category name.
3. Click **Bluetooth PIN**.
4. Set the PIN (0 to 9999).

5. Click ✔ to save or ✖ to cancel.

Set the Bluetooth PIN for a Room

To set the Bluetooth PIN for devices in a Room:

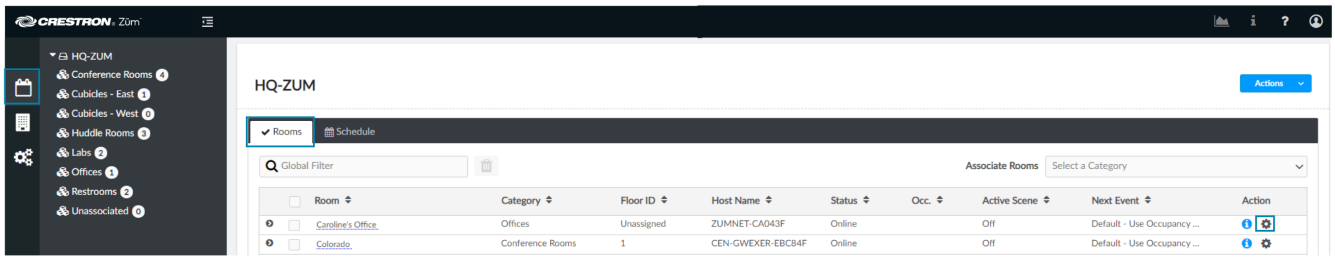

1. Open the **Category View** and the **Room** tab.
2. Click the ⚙ to open the Control Room window.

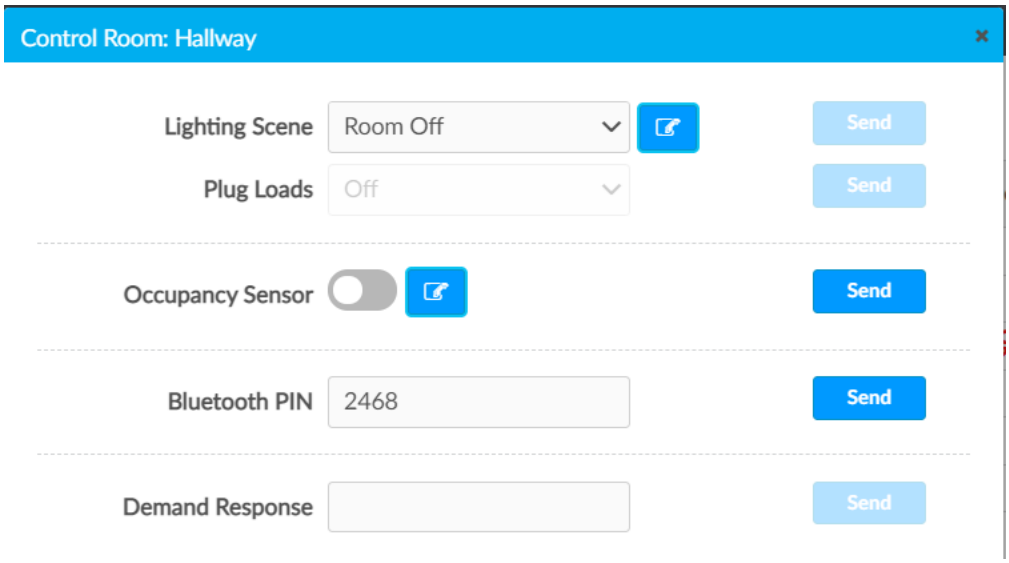

3. For Bluetooth PIN, set the PIN (0 to 9999).
4. Click **Send** to send changes to the room, or close the Control Room window to discard unsaved changes.

Set the Bluetooth PIN for a Floor

To set the Bluetooth PIN for devices on a floor:

1. Open the **System View**.
2. Click the menu beside the Floor name.
3. Click **Bluetooth PIN**.
4. Set the PIN (0 to 9999).

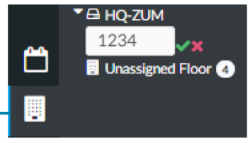

5. Click ✔ to save or ✖ to cancel.

Configure the Demand Response Mode and Level

The Demand Response Level is used in emergency situations to override the current load settings in the room. The load levels reduce when a demand response command is received from the utility company. Demand Response Mode can be manually controlled by accessing the Actions Menu. Demand Response Levels can be set for all discovered devices, all devices in a Room Category, all devices on a Floor, or all devices in a Room.

> **NOTE:** Once a Demand Response Level is set for a device, it remains until manually changed. For example, if a device moves to a different room or floor, the Demand Respond Level does not automatically inherit the level set for the new location. The device keeps the level previously set.

This section provides the following information:

Configure Demand Response Mode

To manually turn Demand Response Mode on or off:

1. Click the **Actions** menu.

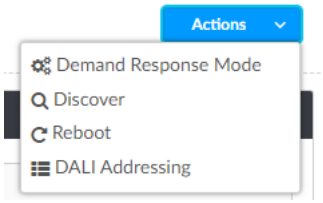

2. Click **Demand Response Mode**. The Configure Demand Response Mode window opens.

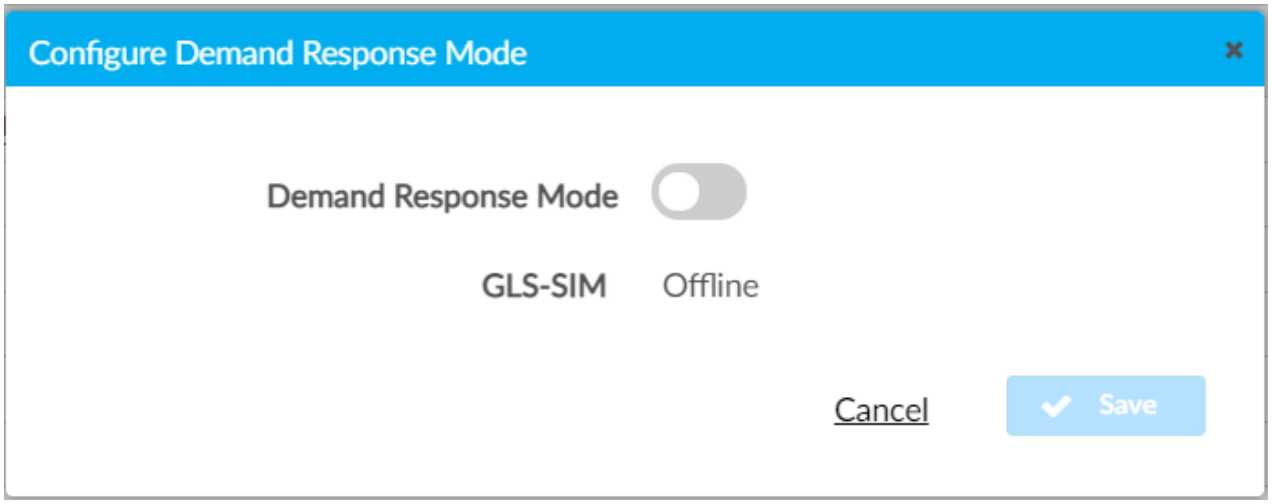

3. Click the toggle turn Demand Response Mode on or off.

   If a GLS-SIM has been discovered by the ZUM-HUB4, the GLS-SIM status is represented as Offline or Online.

4. Click **Save** to save the settings or **Cancel** to close the window without saving.

Set the Demand Response Level for All Discovered Devices

To set the Demand Response Level for all devices:

1. Open the **Category View**.
2. Click the menu beside the ZUM-HUB4.
3. Click **Demand Response** Level.

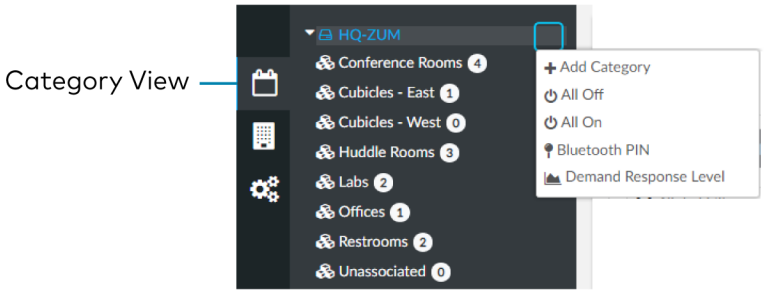

4. Set the light level (0 to 100).

5. Click ✔ to save or ✘ to cancel.

Set the Demand Response Level for a Room Category

To set the Demand Response Level for devices in a Room Category:

1. Open the **Category View**.
2. Click the menu beside the Room Category name.
3. Click **Demand Response** Level.

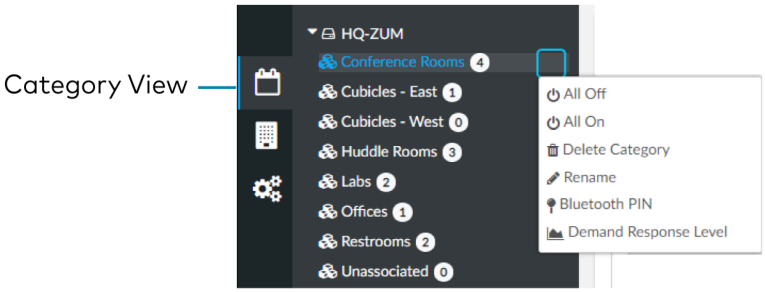

4. Set the light level (0 to 100).

Category View

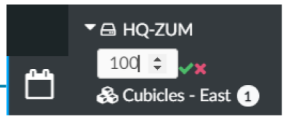

5. Click ✔ to save or ✘ to cancel.

Set the Demand Response Level for a Room

To set the Demand Response Level for devices in a Room:

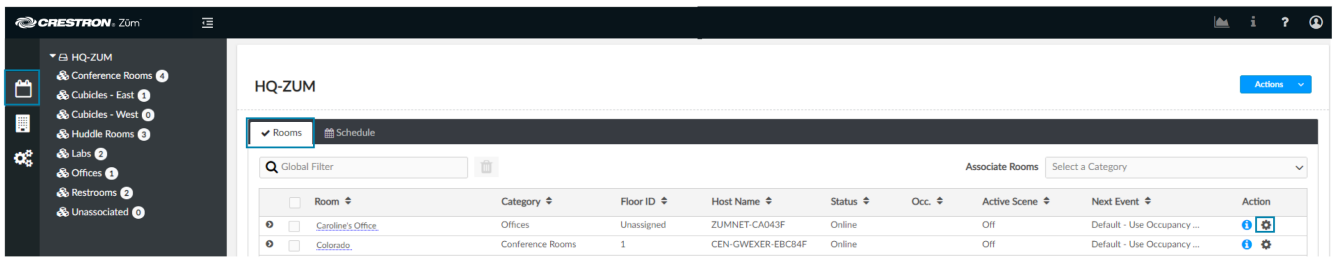

1. Open the **Category View** and the **Room** tab.
2. Click the ⚙ to open the Control Room window.

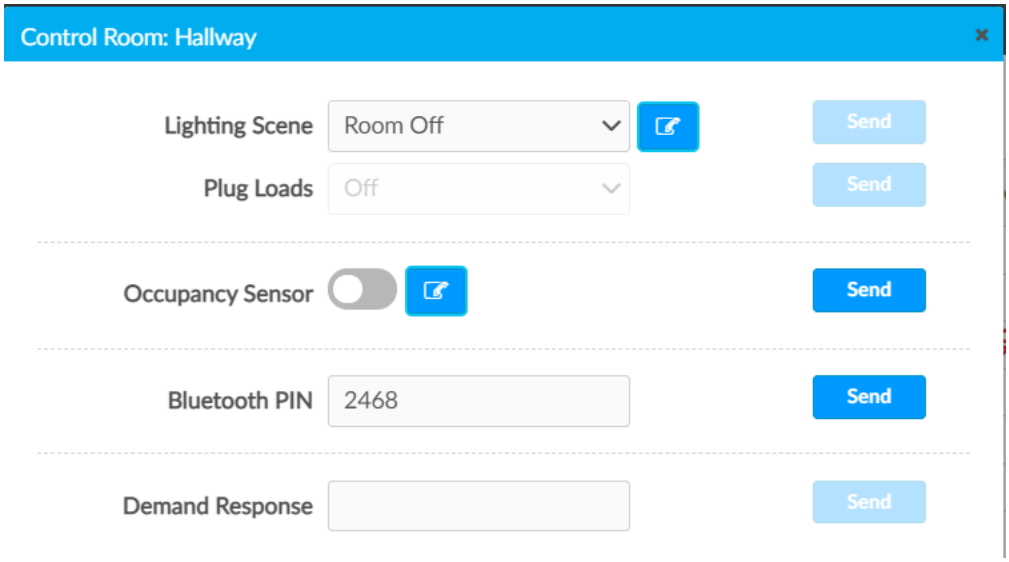

3. For Demand Response, set the level (0 to 100).
4. Click **Send** to send changes to the room, or close the Control Room window to discard unsaved changes.

Set the Demand Response Level for a Floor

To set the Demand Response Level for devices on a Floor:

1. Open the **System View**.
2. Click the menu beside the Floor name.

3. Click **Demand Response** Level.

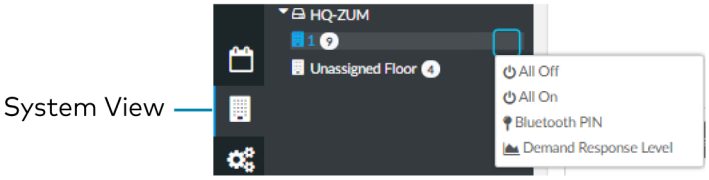

4. Set the light level (0 to 100).

5. Click ✔ to save or ✘ to cancel.

Manage Rooms

The **Rooms** tabs lists the Rooms discovered by the ZUM-HUB4 or the rooms assigned to a selected Room Category. Use the **Rooms** tab search for a room, delete rooms, reassign room categories, edit a room name, view room details, or control a room. Access the Rooms tab through either the Category View or the System View tabs.

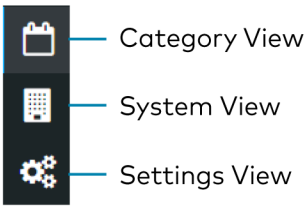

Rooms must be discovered by the ZUM-HUB4 before performing any procedure in this section. Refer to Discover Rooms on page 221.

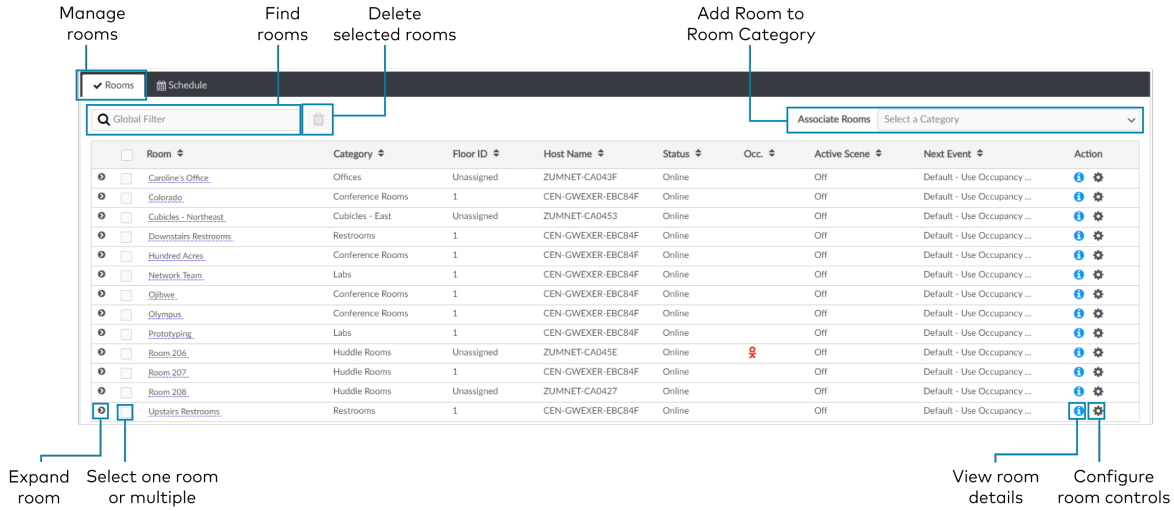

Review Rooms

The Room list displays room information including built-in components.

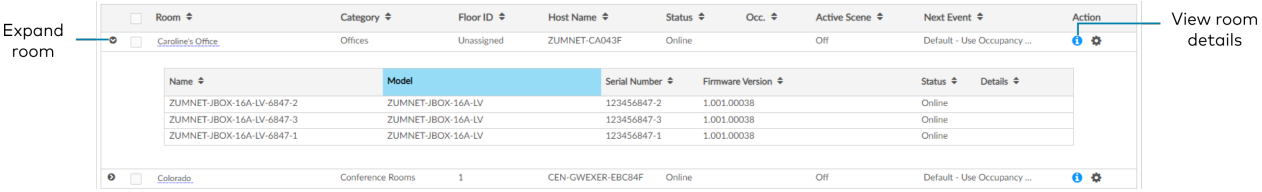

- Room: Displays the room name
- Category: Displays the Room Category
- Floor ID: Displays the Floor ID. The Floor ID can be set in the Hardware Management tab of the Systems View. A Floor ID cannot be assigned to an External Room.
- Host Name: Displays the Host Name of room's main device.
- Status: Displays the room status Online of Offline.

- Occ: Identifies a room with an Occupancy Sensor. The Occupancy sensor symbols ( ) displays when occupancy is detected.
- Active Scene: Displays the current Scene.
- Next Event: Displays the upcoming event.
- Information ( ): Displays room details.
    - Hostname: Displays the Hostname.
    - Room Type: Wired, Wireless, or External room
    - ID: Displays the IP ID for a Wired room, the RF ID for a Wireless room, and the Module ID for an External room
    - Mirror Module: Indicates whether the room is associated with a Mirror Room
    - Occupancy Sensor State: Displays if the Occupancy Sensor is Enabled or Disabled
    - Plug Load State: Displays if the Plug Load is ON or OFF
    - Last Scene Changed: Displays the date and time of the last Scene change.
    - Last Online Status Changed: Displays the date and time of the last Online Status change
    - Last Occupancy Status Changed: Displays the date and time of the last Occupancy Status change

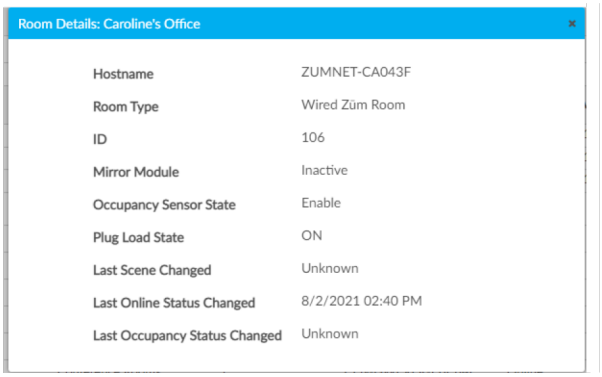

Click to expand the room to display information regarding the components. The Name, Model, Serial Number, Firmware Version, and Status of the devices are defined.

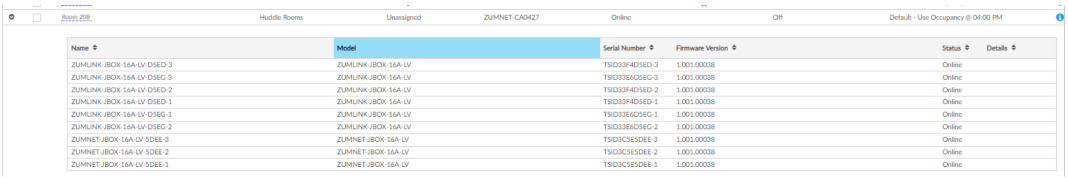

Room 208	Huddle Rooms	Unassigned	ZUMNET-CA0427	Online	Off	Default - Use Occupancy @ 04:00 PM

Name	Model	Serial Number	Firmware Version	Status	Details
ZUMLINK-JBOX-16A-LV-DSED-3	ZUMLINK-JBOX-16A-LV	TSID33F4D5ED-3	1.001.00038	Online	
ZUMLINK-JBOX-16A-LV-DSEG-3	ZUMLINK-JBOX-16A-LV	TSID33E6D5EG-3	1.001.00038	Online	
ZUMLINK-JBOX-16A-LV-DSED-2	ZUMLINK-JBOX-16A-LV	TSID33F4D5ED-2	1.001.00038	Online	
ZUMLINK-JBOX-16A-LV-DSED-1	ZUMLINK-JBOX-16A-LV	TSID33F4D5ED-1	1.001.00038	Online	
ZUMLINK-JBOX-16A-LV-DSEG-1	ZUMLINK-JBOX-16A-LV	TSID33E6D5EG-1	1.001.00038	Online	
ZUMLINK-JBOX-16A-LV-DSEG-2	ZUMLINK-JBOX-16A-LV	TSID33E6D5EG-2	1.001.00038	Online	
ZUMNET-JBOX-16A-LV-5DEE-3	ZUMNET-JBOX-16A-LV	TSID3C5E5DEE-3	1.001.00038	Online	
ZUMNET-JBOX-16A-LV-5DEE-2	ZUMNET-JBOX-16A-LV	TSID3C5E5DEE-2	1.001.00038	Online	
ZUMNET-JBOX-16A-LV-5DEE-1	ZUMNET-JBOX-16A-LV	TSID3C5E5DEE-1	1.001.00038	Online	

Find a Room on the ZUM-HUB4

For a ZUM-HUB4 that has a large number of rooms, use the search feature to find a room name. To search for a room:

1. Click on the ZUM-HUB4 or on a Room Category.
2. Type in the Global Filter search bar. The filter populates results matching content in any of the table fields (Room, Category, Floor ID, Host Name, Status, Occ., Active Scene, or Next Event).

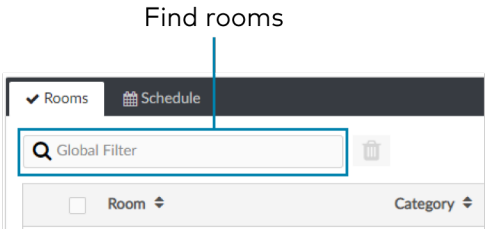

3. Click the desired room name.

Add a Room to a Room Category

To move a room to a different Room Category:

1. Click on the ZUM-HUB4 or on a Room Category.
2. Select the desired room or rooms.
3. Click the **Associate Rooms** menu.
4. Select the desired Room Category.

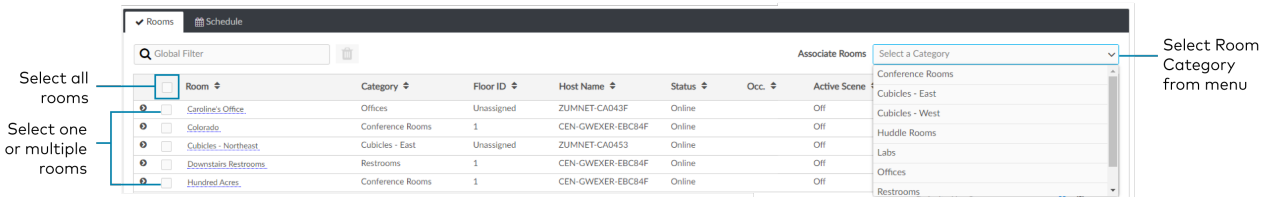

5. A confirmation dialog opens. Click **Yes** to add the room(s) the Room Category or **No** to cancel.

Delete a Room

To delete a room:

1. Click on the ZUM-HUB4 or on a Room Category.
2. Select the desired room or rooms.
3. Click to delete the room.

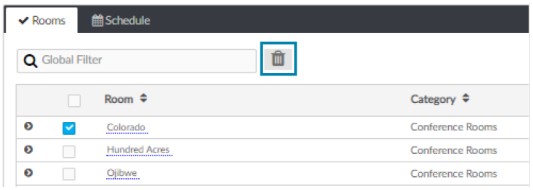

4. A confirmation dialog opens. Click **Yes** to add the room(s) the Room Category or **No** to cancel.

Control Devices in a Room

Open the Control Room window to select a Lighting Scene, change the state of Plug Loads, enable or disable the occupancy sensor, set the Bluetooth PIN, or set the Demand Response level for a specific room.

1. Click on the ZUM-HUB4 or on a Room Category.
2. For the desired room, click the ⚙ to open the Control Room options.

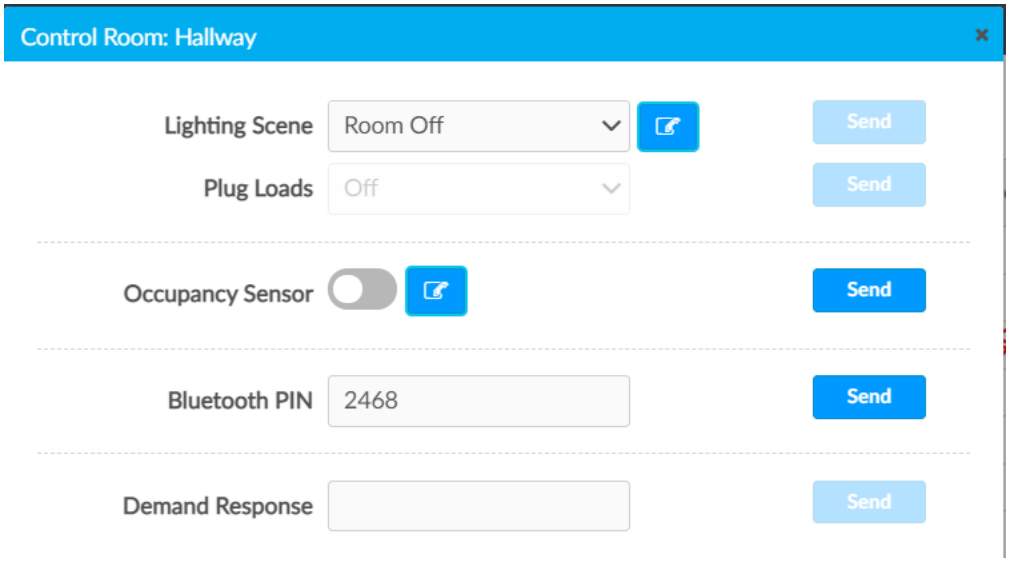

Lighting Scene

To select the Lighting Scene set in the Room:

1. Select a Lighting Scene from the drop down menu.
2. Click to access the devices in the room.
3. To edit the light levels, move the slider or use the arrows. For switches, select **ON** or **OFF**.
4. Click **Send** to send changes to the room, or close the Control Room to discard unsaved changes.

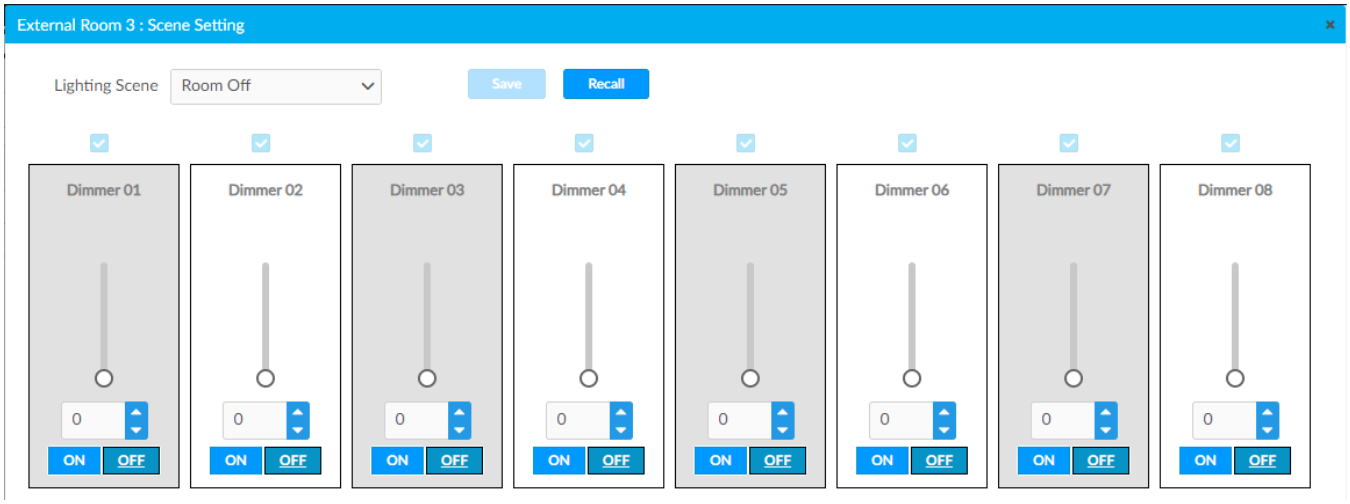

Plug Loads

This setting is only active for rooms with a Plug Load Controller.

1. Select **On** or **Off** from menu to turn the load on or off.
2. Click **Send** to send changes to the room, or close the Control Room to discard unsaved changes.

Occupancy Sensor

To enable or temporarily disable occupancy sensing:

1. Click the toggle to enable or temporarily disable occupancy sensing.

   When disabling occupancy sensing, set the amount of time the occupancy sensor is disabled. The sensor may be disabled for up to 1,415 minutes or appropriately 23 hours.

2. Click **Send** to send changes to the room, or close the Control Room to discard unsaved changes.

Bluetooth PIN

Set the Bluetooth PIN for Bluetooth devices in a room.

1. Set the PIN (0 to 9999)
2. Click **Send** to send changes to the room, or close the Control Room to discard unsaved changes.

Refer to Set the Bluetooth PIN on page 228 for more information.

Demand Response Level

Set the Demand Response Level for devices in a room.

1. Set the level (0 to 100).
2. Click **Send** to send changes to the room, or close the Control Room to discard unsaved changes.

Refer to Configure the Demand Response Mode and Level on page 230 for more information.

Control Mirror Room or External Room Modules

Mirror Rooms modules allow users to view and control a Zūm space with a non Zūm control processor. External Rooms modules allow users to incorporate non Zūm devices into a Zūm space and control them as if they were Zūm devices. Mirror Room modules and External Rooms modules report device level infomration through custom programming.

To control External Rooms and the devices in them, follow the procedures in Control Devices in a Room on page 237. For more information, refer to Manage External Controls on page 257.

Schedule Room Behavior

The Schedule tab displays and allows you to edit the device calendar, Day Patterns, Room States, Holidays, and the astronomical clock. The calendar displays a color-coded month view that identifies the Day Pattern that is assigned for each day of the month. The calendar is used to view and change which Day Pattern is set on a given day.

By default, weekdays are assigned the Workday Day Pattern and weekends are assigned the Weekend Day Pattern. Holidays that are enabled in Holidays on page 245 are added to the calendar automatically. Refer to the Day Pattern legend to match the color with the associated Day Pattern. To assign a Day Pattern:

1. Open the Category View.

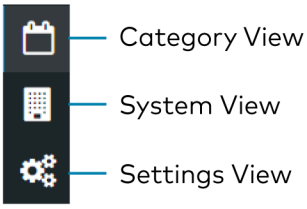

2. Click the **Schedule** tab.
3. Click the desired date in the calendar. If necessary, change the month and year using the drop-down menus, and then click the desired date.

   A menu displays a list of the available Day Patterns.
4. Select the desired Day Pattern.

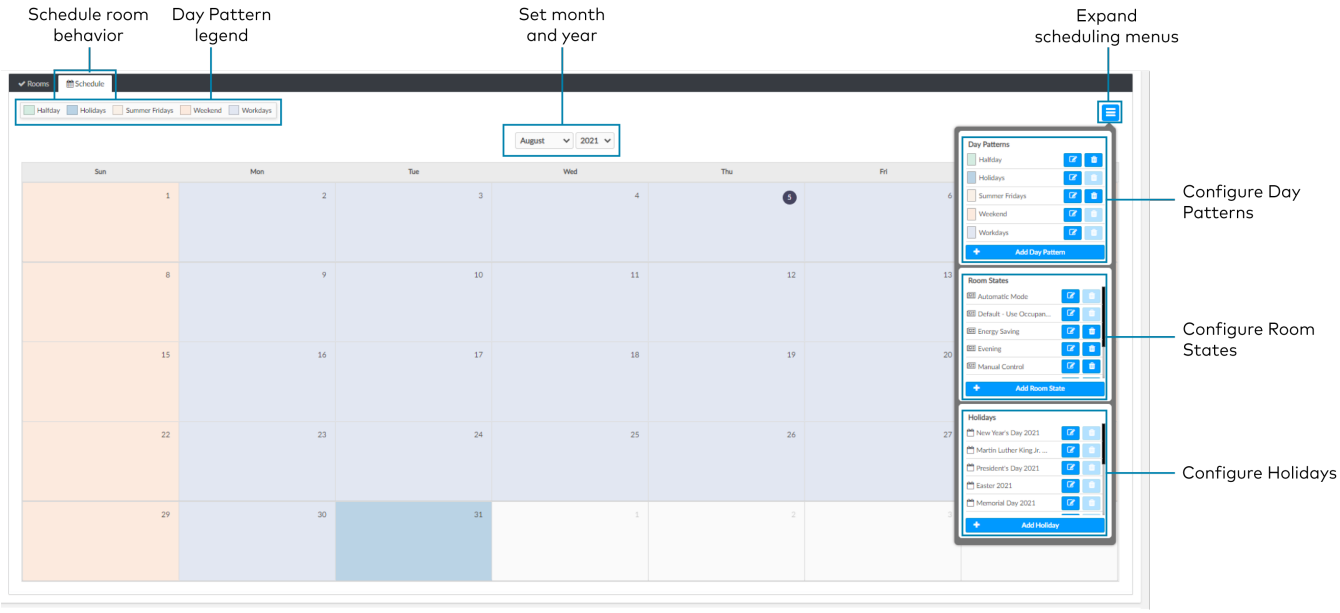

Day Patterns

A Day Pattern consists of various Room States that are assigned throughout the day. Each category can be assigned a different schedule of room states in a given day pattern. To access the Day Patterns menu, click the Schedule tab and click to expand the scheduling menus.

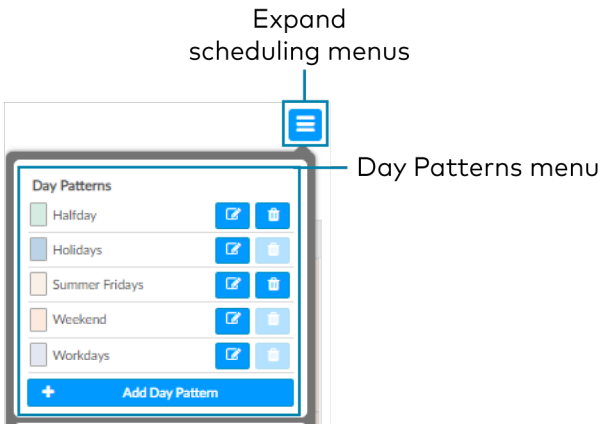

Add Day Patterns

Click **Add Day Pattern** and enter the desired Day Pattern name. Click to save the name, click to cancel.

Delete Day Pattern

To delete a Day Pattern:

1. Click to delete a Day Pattern. A Confirmation window opens.
2. Click **Yes** to delete the Day Pattern, or click **No** to keep the Day Pattern.

> **NOTE:** A Default Day Pattern (such as Holidays, Weekend, and Workdays) cannot be deleted.

Configure Day Patterns

After adding a Day Pattern, the **Add Day Pattern** window opens. Alternatively, clicking beside a Day Pattern opens the **Edit Day Pattern** window. These windows display two menus: Room State Schedule and Sunrise/Sunset Schedule. The Room State Schedule opens by default.

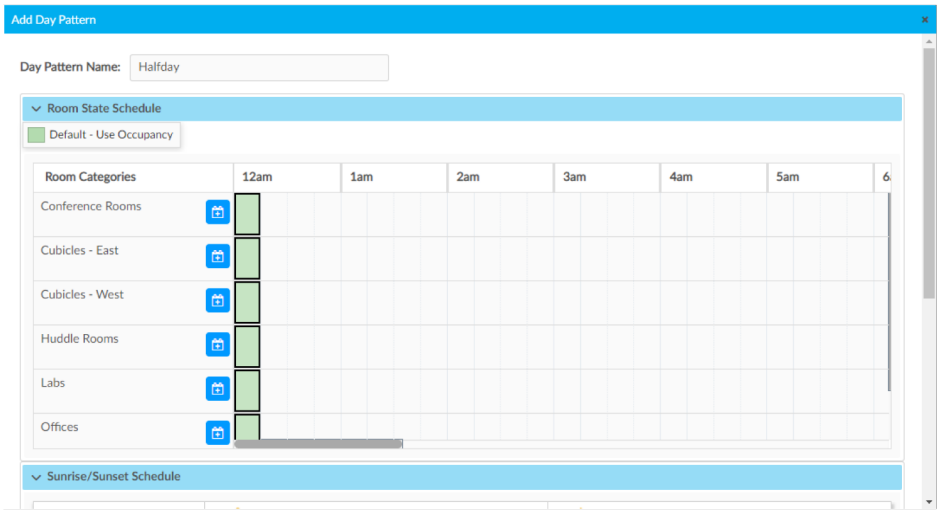

Room State Schedule

Use the Room State Schedule window to modify the pattern of Room States in each Category for the selected Day Pattern.

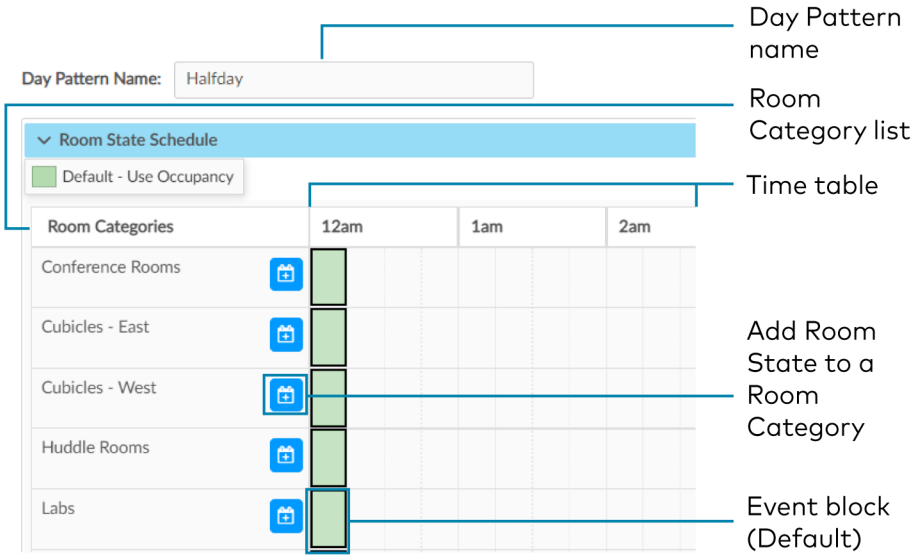

To add a Room State to a Room Category:

1. Click to add a Room State. The **Add Room State** window opens.
2. Select the desired Room State from the Name drop-down menu. The default Room State selections are examples of possible Room State applications and can be edited as needed.
   - Automatic Mode
   - Default - Use Occupancy
   - Energy Saving
   - Manual Control
   - Morning Turn Off
   - Morning Turn On
   - Sweep Off
3. Select the desired Room State start time from the Time drop-down menu: 12 AM - 11:45 PM.
4. Click **Ok** to save the room state or **Cancel** to close the window without saving.

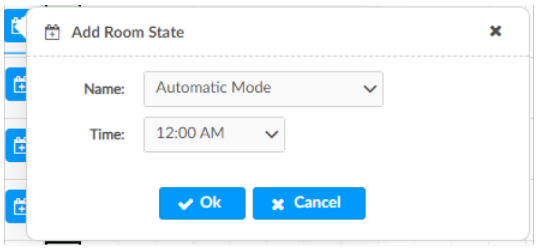

To edit a default or custom event block:

- Change the assigned Room State:
  1. Click an event block, and a dialog opens.
  2. Click and choose a new Room State from the drop-down menu.
  3. Click **Ok** to save the changes or **Cancel** to close the window without saving.
- Change the assigned time:

  Click and drag the event block to the desired time within the time table.

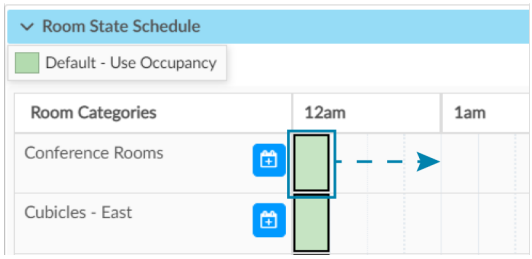

Click and drag the event block to the desired time along the time table.

Sunrise/Sunset Schedule

The ZUM-HUB4 determines sunrise and sunset based on the location set in Location on page 253 settings. The Sunrise/Sunset Schedule assigns a Room State to a Room Category based on the Day Pattern and the sunrise or sunset. Only one Sunrise event and one Sunset event can be set for a Room Category per day. To assign Room States based on the sunrise or sunset:

1. Expand the Sunrise/Sunset Schedule menu.
2. Locate the Room Category.
3. Adjust the settings in the Sunrise events column and/or the Sunset events column.
    - **ENABLE:** Click the **ENABLE** toggle to allow sunrise or sunset to trigger an event.
    - **ROOM STATE:** Select the a Room State from the drop-down menu.
    - **OFFSET (MIN):** If necessary, set an offset duration in minutes. The offset can be positive so the Room State occurs after sunrise or sunset or negative so that the Room State occurs before sunrise or sunset.

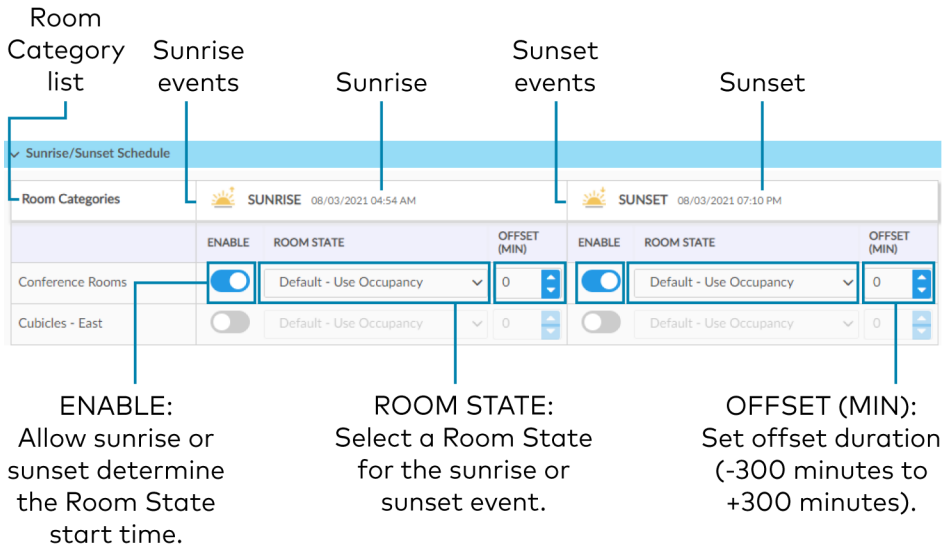

Room States

A Room State is both a set of events as well as a set of behaviors for a Room Category. It identifies the lighting scene that is recalled, the functionality of the occupancy sensor and the plug load controllers. To access the Room States menu, click the **Schedule** tab and click to expand the scheduling menus.

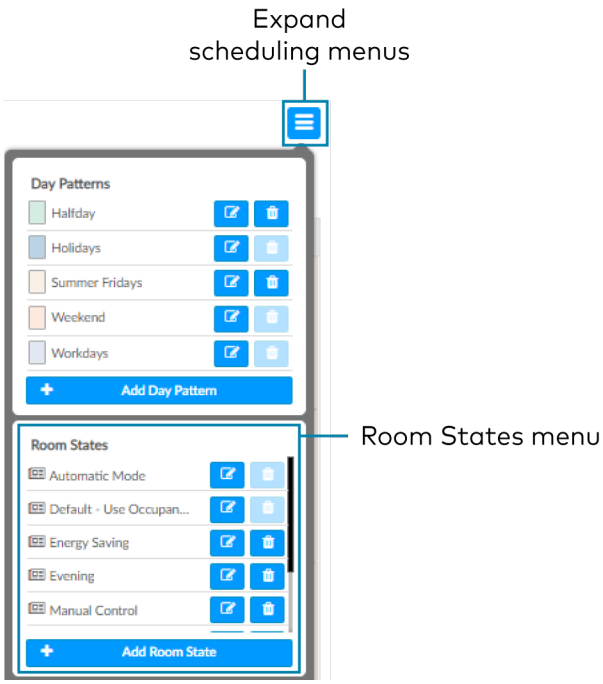

Configure a Room State

Click **Add Room State** to add a new Room state or to edit an existing Room State. The **Room State Settings** window opens. To configure a Room State in the **Room State Settings** window:

1. Enter or edit the name of the desired Room State in the **Room State Name** filed.
2. Configure the Properties:
   - **Scene:** Select Scene 1 - 16, **None**, or **Room Off**.
   - **Occupancy:** Select **Enabled** to allow occupancy sensing, **Disabled** to turn occupancy sensing off, or **Unaffected** to use the setting of the previous event.
   - **Plug Loads:** Select **On** to turn on the Plug loads, **Off** to turn off the Plug Loads, or **Unaffected** to use the setting of the previous event.
3. Click **Cancel** to close the window without saving, or **Add** to add the Room State.

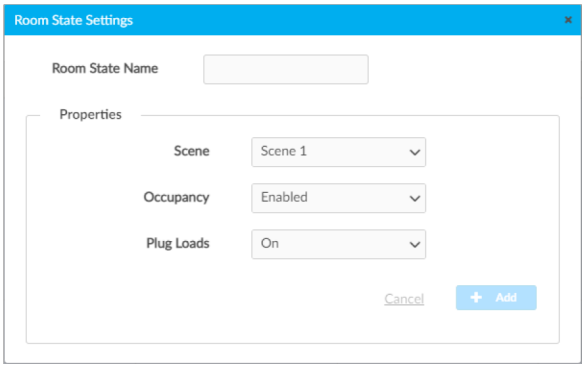

Delete a Room State

To delete a Room State:

1. Click to delete a Room State. A confirmation window opens.
2. Click **Yes** to delete the Room State, or click **No** to keep the Day Pattern.

> **NOTE:** A Default Room State (such as Automatic Mode and Default - Use Occupancy) cannot be deleted.

Holidays

The Holidays menu allows you to create a new holiday and to edit the holiday properties. Holidays that are enabled are automatically added to the calendar in the **Schedule** tab. To access the Holidays menu, click the **Schedule** tab and click to expand the scheduling menus.

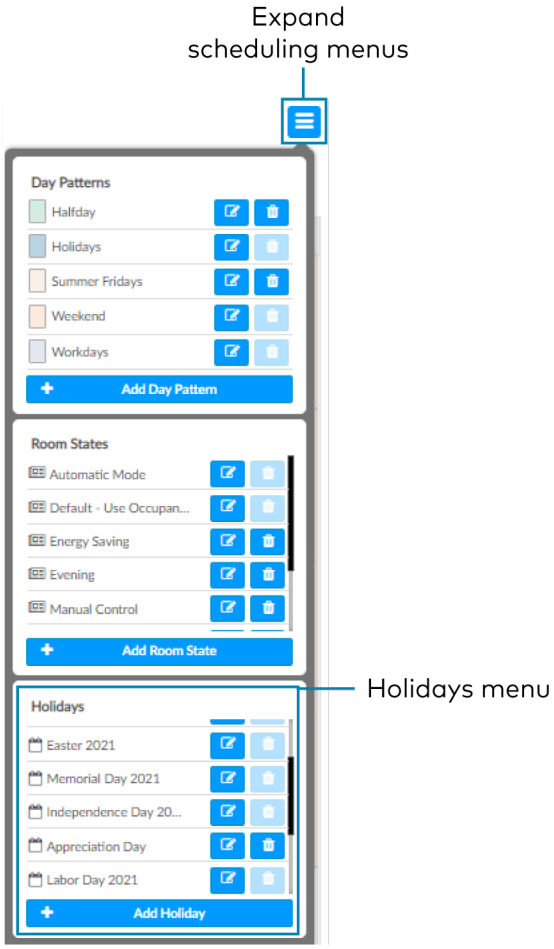

Add Holidays

Click **Add Holiday** and type the desired Holiday name. Click ✔ to save the name, click ✖ to cancel.

Delete a Holiday

To delete a Holiday:

1. Click 🗑 to delete a Holiday. A confirmation window opens.
2. Click **Yes** to delete the Holiday, or click **No** to keep the Holiday.

> **NOTE:** A default Holiday cannot be deleted.

Configure Holidays

After adding a Holiday, the **Holiday Settings** window opens. Alternatively, clicking ✎ beside a Holiday opens the **Edit Holiday Settings** window. These windows display the Holiday settings. To configure Holidays in the **Holiday Settings** window:

1. Enter or edit the name of the desired Holiday in the **Holiday** field.
2. Configure the Properties:
   - **Day Pattern:** By default, the Holiday Day Pattern is selected
   - **Enabled:** By default, the Enabled toggle is on. Turn the toggle off to prevent the holiday from appearing in the calendar on the **Schedule** tab. When the toggle is off, the default Day Pattern is applied instead.
   - **Observed:** Select a date to observe the holiday.
3. Click **Add** to add the Holiday or **Cancel** to close the window.

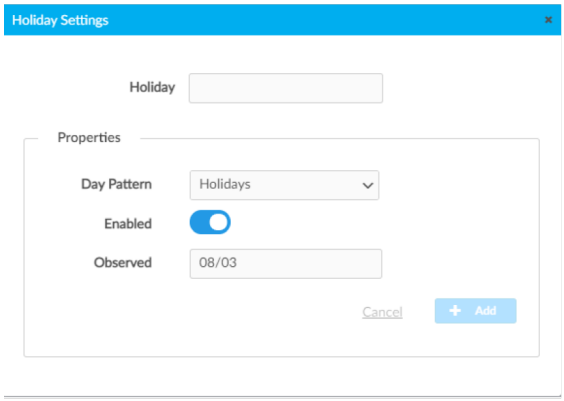

Manage Floors

Rooms must be discovered by the ZUM-HUB4 before performing any procedure in this section. Refer to Discover Rooms on page 221. Access Floors in the System View. To manage a Floor, refer to the following information:

- Turn On/Off a Floor on page 226
- Set the Bluetooth PIN for a Floor on page 229
- Set the Demand Response Level for a Floor on page 232
- Manage Rooms on page 234
- Manage Devices on page 248

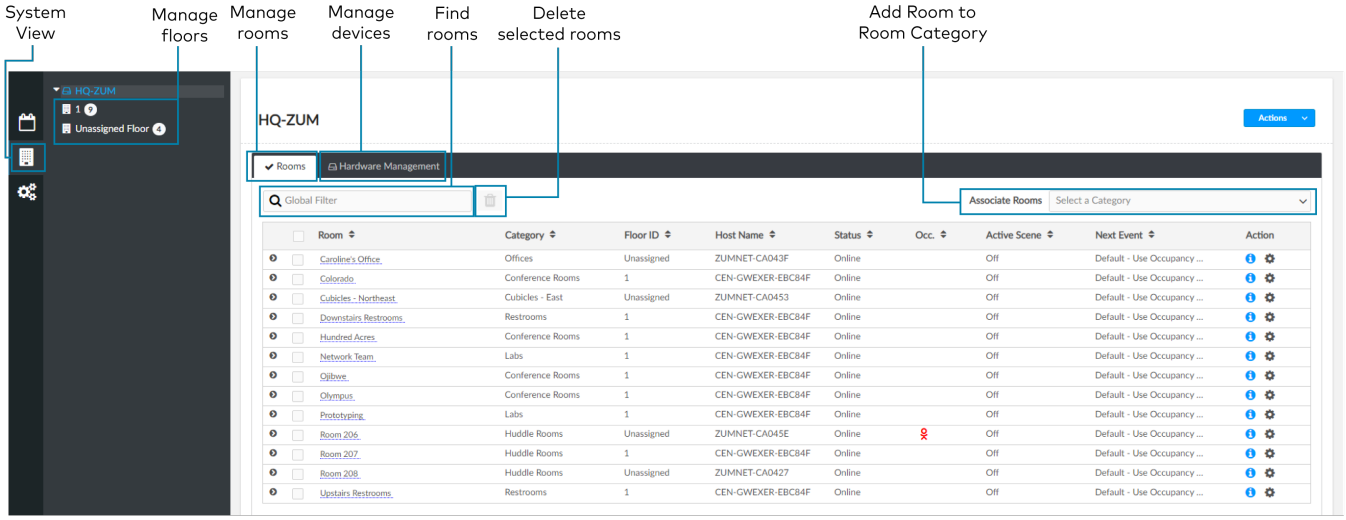

Manage Devices

In the System View, manage devices in the Hardware Management tab. Devices are divided into two categories: **Wired** and **Wireless**. Expand the Wireless menu to view and edit wireless devices. Expand the Wired menu to view and edit wired devices.

Rooms must be discovered by the ZUM-HUB4 before performing any procedure in this section. Refer to Discover Rooms on page 221.

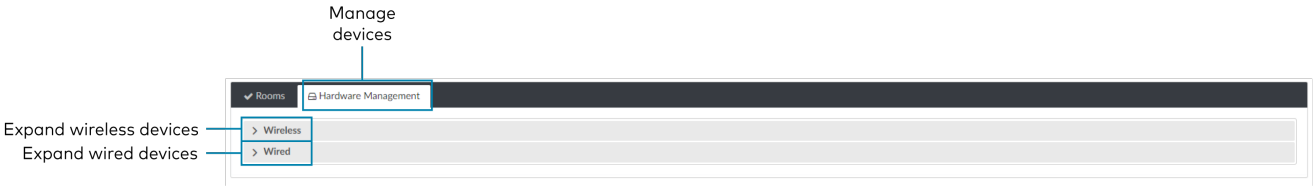

Wireless Devices

Access wireless gateways in the **Hardware Management** tab and expand the **Wireless** menu. View information about the gateway, assign Floor or Zone IDs, and identify or remove a gateway. To view, move, and delete the rooms assigned to the gateway, refer to Review Rooms Assigned to a Gateway on page 249.

Information about the gateway:

- Gateway Hostname: Displays the gateway's name.
- IP ID: Displays the gateway's IP ID.
- Serial Number: Displays the gateway's serial number.
- IP Address: Displays the gateway's IP address.
- Floor ID: Refer to Assign a Floor ID to a Gateway on page 249.
- Zone ID: Refer to Assign a Floor ID to a Gateway on page 249.
- Action: Refer to Identify a Gateway on page 249 and Remove a Gateway on page 249.

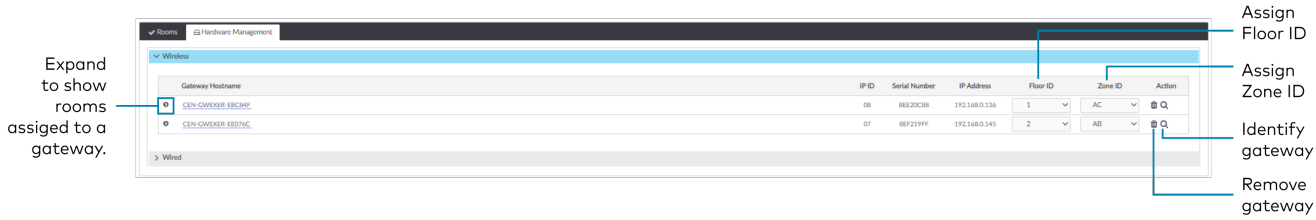

Assign a Floor ID to a Gateway

Assigning a Floor ID to a gateway helps gateways discover wireless devices with the matching Floor ID. Set a device's Floor ID in the Zūm app before discovering the devices on the ZUM-HUB4. The Floor ID drop-down menu options are numbers -40 to + 200 and Disabled. The Floor ID can be negative to indicate a floor below ground or positive to indicate a level above ground. Disabled categorizes the gateway to Unassigned Floor.

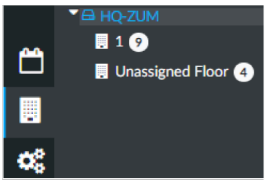

Assign a Zone ID to a Gateway

To designate different areas of a floor as a zone, assign a gateway a Zone ID. Assigning a Zone ID to a gateway helps gateways discover wireless devices with the matching Zone ID. Set a device's Zone ID in the Zūm app before discovering the devices on the ZUM-HUB4. The Zone ID drop-down menu options are letter groupings AA to AZ and BA to BF.

Identify a Gateway

To identify a gateway, click . The SETUP LED on the gateway flashes.

Remove a Gateway

To delete a gateway, click . A confirmation window opens. Click **Yes** to delete the gateway, or **No** to keep the gateway.

Review Rooms Assigned to a Gateway

Click next to a gateway to view its assigned rooms:

- **Netbridge:** Lists assigned rooms.
- **Status:** Displays Online or Offline to show the device status.
- **Floor ID:** Inherits the Floor ID assigned to the gateway.
- **Zone ID:** Inherits the Zone ID assigned to the gateway
- **Action:** Move a room to a different gateway or remove a room.
  - Click to move a room. The Move window opens.
    - Select the desired gateway from the drop-down menu.
    - Click **Move** to move the room or **Cancel** to close the window without moving the room.

      > **NOTE:** Moving a room to a gateway with different a Floor ID or Zone ID changes the room's Floor ID or Zone ID to match the new gateway.
  - Click to remove a room. A confirmation window opens. Click **Yes** to delete the room or **Cancel** to close the window without deleting the room.

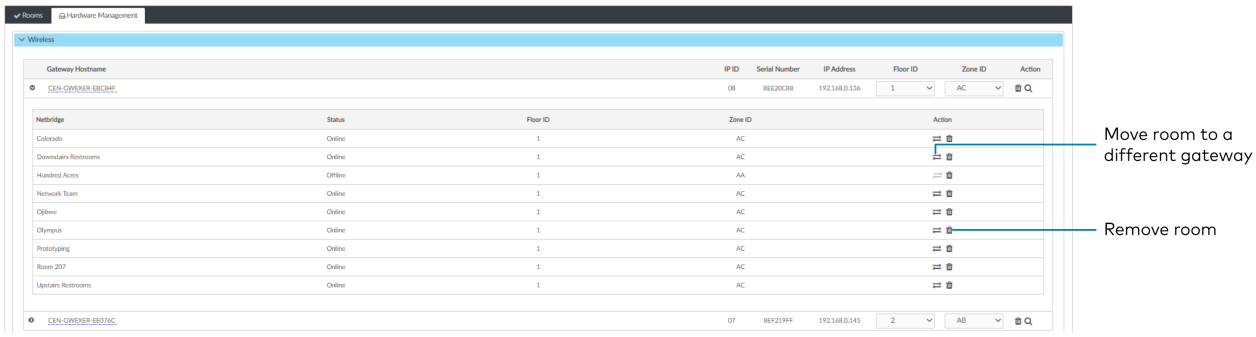

Wired Devices

Access wired Room Access Points in the **Hardware Management** tab and expand the **Wired** menu. A Room Access Point (RAP) is the main device in the room. View information about the RAP, assign Floor or Zone IDs, or remove an RAP. To view devices connected to RAP, refer to Review RAP Components on page 251.

- **Room Access Point Hostname:** Displays the main device's name.
- **IP ID:** Displays the main device's IP ID.
- **Serial Number:** Displays the main device's serial number.
- **IP Address:** Displays the main device's IP address.
- **Floor ID:** Refer to Assign a Floor ID to an RAP on page 250.
- **Zone ID:** Refer to Assign a Zone ID to an RAP on page 251.
- **Action:** Refer to Remove a RAP on page 251.

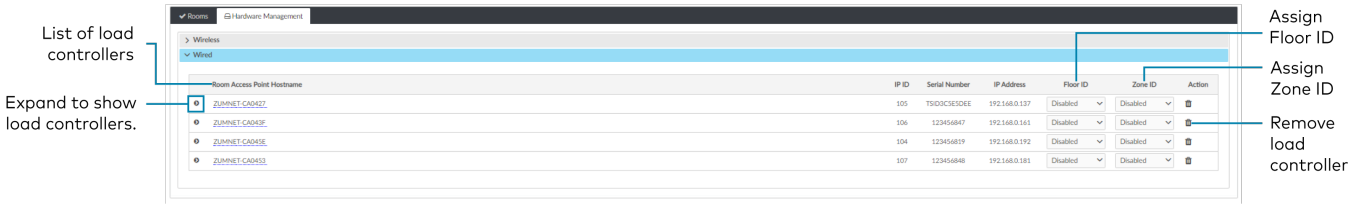

Assign a Floor ID to an RAP

Assigning a Floor ID to a load controller adds a floor to the Floor list. The Floor ID drop-down menu options are numbers -40 to + 200 and Disabled. The Floor ID can be negative to indicate a floor below ground or positive to indicate a level above ground. Disabled categorizes the load controller to Unassigned Floor.

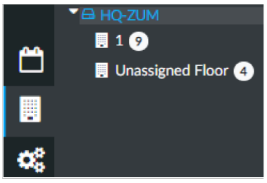

Assign a Zone ID to an RAP

To designate different areas of a floor as a zone, assign a load controller a Zone ID. The Zone ID drop-down menu options are letter groupings AA to AZ and BA to BF.

Remove a RAP

To delete a load controller, click . A confirmation window opens. Click **Yes** to delete the load controller, or **No** to keep the load controller.

Review RAP Components

Click next to a load controller to view connected devices.

- **Device:** Displays child devices connected to the parent load controller.
- **Status:** Displays Online or Offline to show the child device's status.
- **Cresnet ID:** Displays the child device's Cresnet® control network ID.
- **Serial Number:** Displays the child device's serial number.
- **Version:** Displays the child device's current firmware version.
- **Components:** Click to view the child device components. Components displays the internal functions of a load controller, such as the internal occupancy sensors, photocell, and load controller, as well as other devices connected to the device, such as a keypad.
  - Name: For internal components, the name of the component is the device name plus the suffix "-1," "-2," or "-3."
    - -1: Load Controller component: Controls the connected loads.
    - -2: Occupancy sensor component: Uses occupancy to control the connected loads.
    - -3: Photocell component: Uses ambient light to control the connected loads.
    - Change the component name by using the Zūm App.
  - Model: Displays the device model.
  - Serial Number: Displays the component's serial number.
  - Firmware Version: Displays the component's firmware version.
  - Status: Displays Online or Offline to show the component's status.

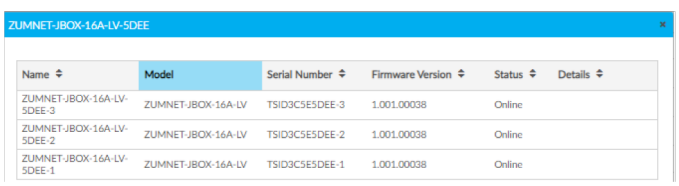

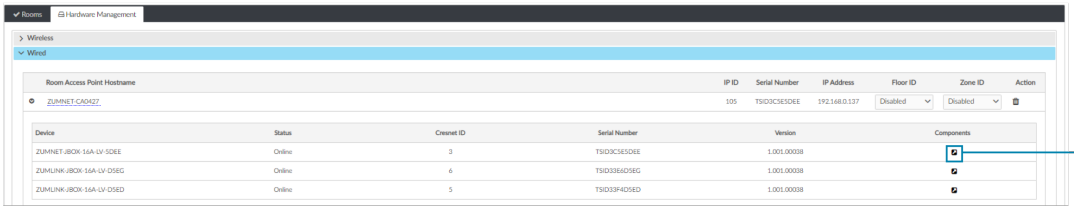

Manage Settings

Access Settings in the Settings View. The Settings tab displays and allows you to edit the firmware, system time and location, network configuration, security configuration, and Crestron services.

Manage ZUM-HUB4 settings

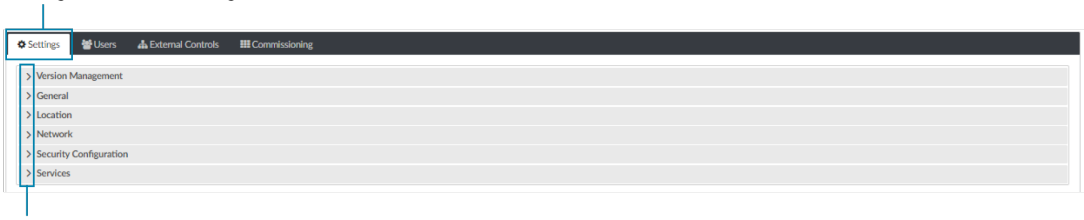

Expand Settings

Version Management

Allows you to check for firmware updates for the ZUM-HUB4 and connected devices. Firmware updates for battery powered devices may take up to 24 hours. To update firmware:

1. Open **Settings View**.
2. Click **Settings**.
3. Click **Version Management**.
4. From Update Method, select **Cloud** or **Removeable Media**.
5. If using removeable media, insert the device.
6. Check the box under **Action** for the devices whose firmware you want to update.
7. Click **Update Now**.

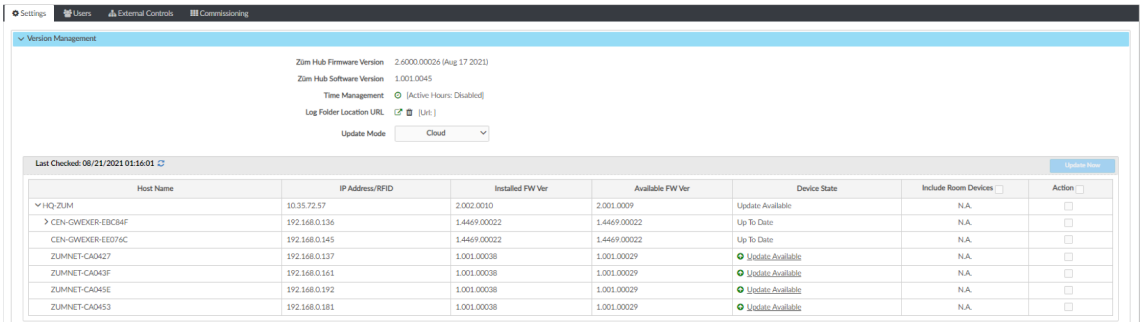

General

Displays the date, time, and time zone. To change the date and time:

1. Open **Settings View**.
2. Click **Settings**.
3. Click **General**.
4. Enter new values in the fields.

5. Click Save Changes to save the changes or Revert to discard changes.

> **NOTE:** Changing these settings requires an immediate system reboot.

A confirmation windows opens. Click **Yes** to reboot or **No** to close the window.

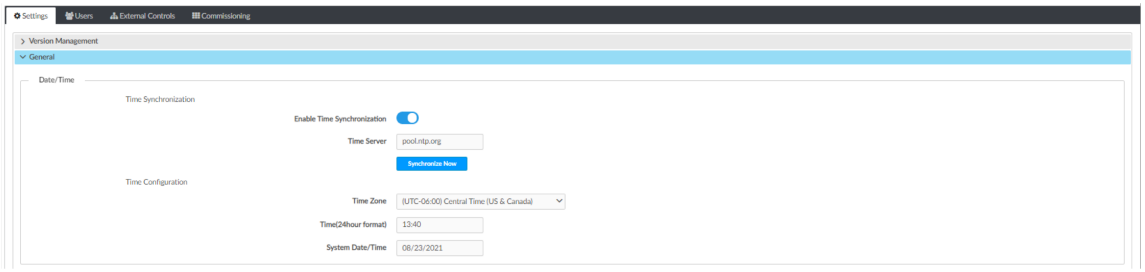

Location

Displays the location (latitude and longitude). Accurate location ensures the Sunrise/Sunset Schedule displays the correct sunrise and sunset times. To change the location:

1. Open **Settings View**.
2. Click **Settings**.
3. Click **Location**.
4. Enter new values in the fields.
5. Click Save Changes to save the changes or Revert to discard changes.

> **NOTE:** Changing these settings requires an immediate system reboot.

A confirmation windows opens. Click **Yes** to reboot or **No** to close the window.

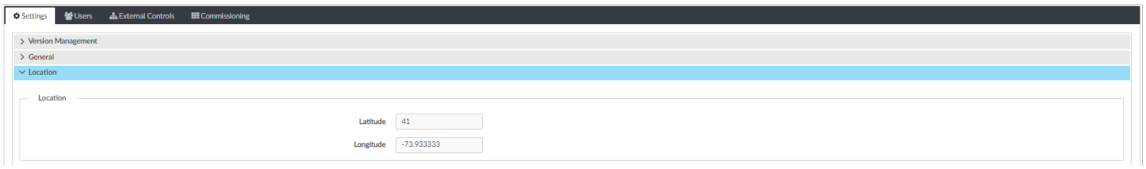

Network

Displays the Ethernet settings. To change the Ethernet settings:

1. Open **Settings View**.
2. Click **Settings**.
3. Click **Network**.
4. Enter new values in the fields. Some fields are not available if DHCP is on.
5. Click Save Changes to save the changes or Revert to discard changes.

> **NOTE:** Changing these settings requires an immediate system reboot.

A confirmation windows opens. Click **Yes** to reboot or **No** to close the window.

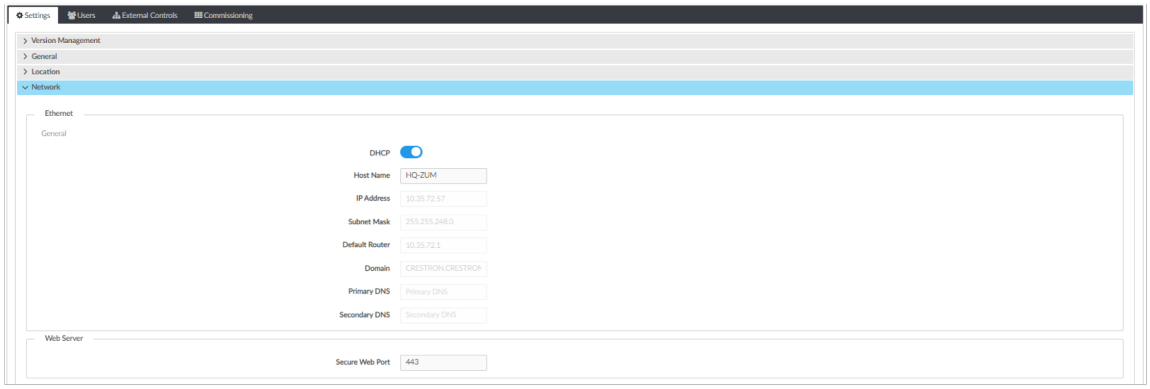

Security Configuration

Allows the user to change the device service password. To edit the password:

1. Open **Settings View**.
2. Click **Settings**.
3. Click **Security Configuration**.
4. Click and to new values in the fields.
5. Click Save Changes to save the changes or Revert to discard changes.

   A confirmation windows opens. Click **Yes** to reboot or **No** to close the window.

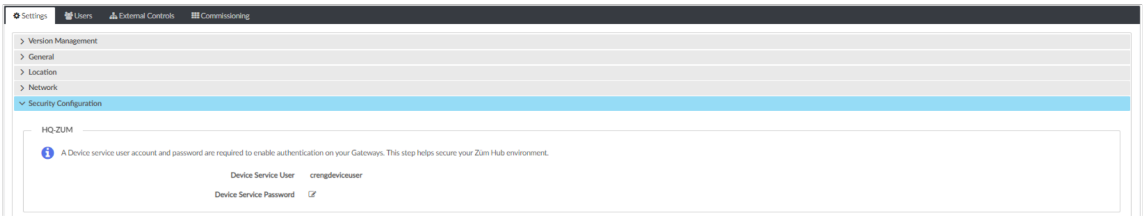

Services

Displays Cloud Settings. To turn Cloud Configuration Service on or off:

1. Open **Settings View**.
2. Click **Settings**.
3. Click **Services**. Cloud Configuration Service is on by default.
4. To turn off Cloud Configuration Service, click the toggle.
5. Click Save Changes to save the changes or Revert to discard changes.

   > **NOTE:** Changing these settings requires an immediate system reboot.

   A confirmation windows opens. Click **Yes** to reboot or **No** to close the window.

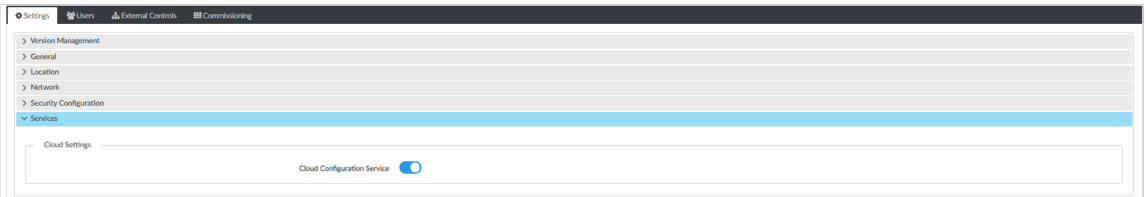

Manage Users

Access Users in the Settings View. The Users tab shows a list of all users and allows you to create new users and modify or delete existing users. The username must be 3 to 15 characters and are permitted to use uppercase letters (A-Z, lowercase letters (a-z), digits (0-9), and special characters (- ( ) + [ ] . _). The password must be 8 to 12 characters is required to contain at least one uppercase letters (A-Z), lowercase letters (a-z), digits (0-9), and special characters (#?!@$%^&*-).

Manage Users

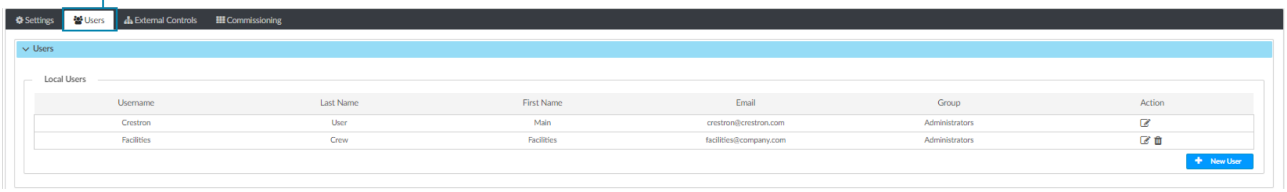

Create a New User

To create a new User:

1. Open **Settings View**.
2. Click **Users**.
3. Click New User.
4. Enter the user details.
5. Click **Save** to save the new user or **Cancel** to exit without creating a new user.

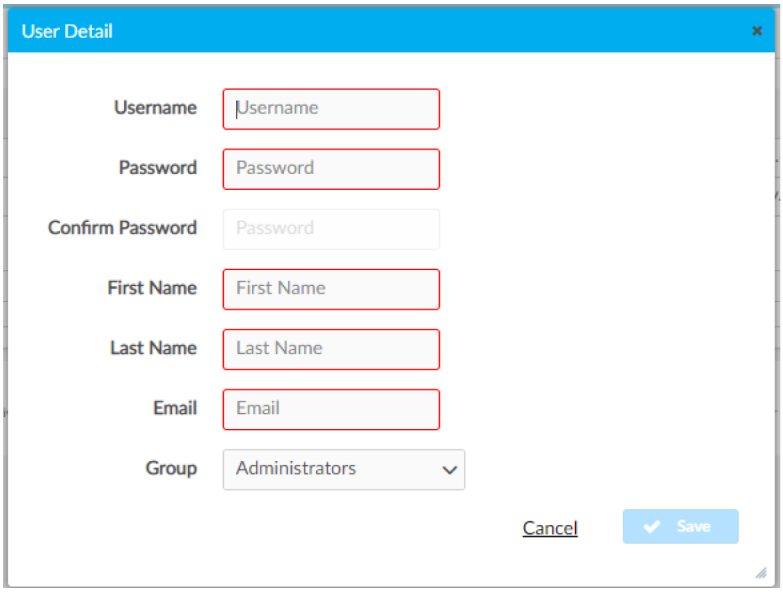

Configure an Existing User

To configure an existing User:

1. Open **Settings View**.
2. Click **Users**.
3. Click next to the user.

4. Update the user details.
5. Click **Save** to save the changes or **Cancel** to exit without saving the changes.

Delete an Existing User

To delete an existing User:

1. Open **Settings View**.
2. Click **Users**.
3. Click 🗑 next to the user.
4. Click **Yes** to delete the user or **No** to cancel without deleting the user.

External Users

For External Rooms to successfully connect, create a User and select **ExternalUser** from the Group drop-down menu. The Username and Password must match the credentials used for the SIMPL+® software module.

> **NOTES:**
>
> - SIMPL+® software modules are provided for use in commissioning a Crestron control system to work with the ZUM-HUB4. The software modules run within the control system program and provide virtual connections for all the necessary intersystem control signals. A separate dedicated module is required for each external and mirrored room. Control systems are limited in the number of modules supported, ranging from 0 to 2001000 depending on the model. For further assistance, please contact Crestron Commercial Lighting Support via email at clclighting@crestron.com or by calling 855-644-7643.
> - Other Crestron control systems must be commissioned to provide the control logic required to communicate and operate as part of the Zūm network. Once integrated, each external room effectively becomes a part of the Zūm ecosystem.

Manage External Controls

Access External Controls in the Settings View. Use the External Controls tab to manage External Room settings. External Rooms provide the ability to integrate third-party devices into a Zūm lighting control system. To create a User for External Rooms, refer to External Users on page 256. To control External Room or Mirror Room modules, refer to Control Mirror Room or External Room Modules on page 238.

SIMPL+® software modules are provided for use in commissioning a Crestron control system to work with the ZUM-HUB4. The software modules run within the control system program and provide virtual connections for all the necessary intersystem control signals. A separate dedicated module is required for each external and mirrored room. Control systems are limited in the number of modules supported, ranging from 0 to 2001000 depending on the model. For further assistance, please contact Crestron Commercial Lighting Support via email at clclighting@crestron.com or by calling 855-644-7643.

Manage External Controls

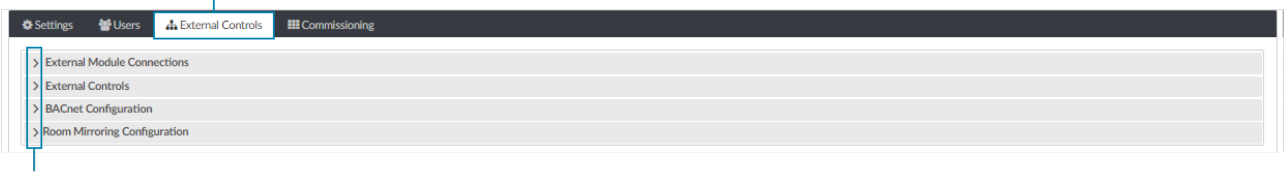

Expand External Cotrols settings

External Module Connections

To allow or prevent older versions of module to be used:

1. Open **Settings View**.
2. Click the **External Controls** tab and expand the **External Module Connections** menu.
3. Click the toggle to turn **Allow Legacy Module Connection** on or off.

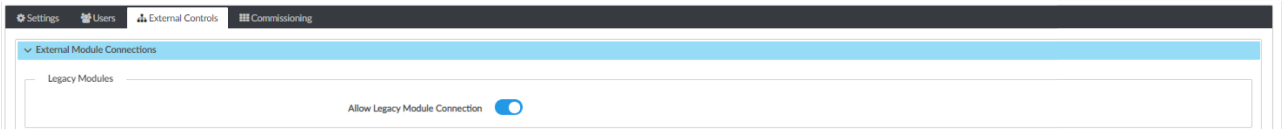

External Controls

Access External Controls in the Settings View. Use the **External Controls** menu to add, edit, or delete a macro.

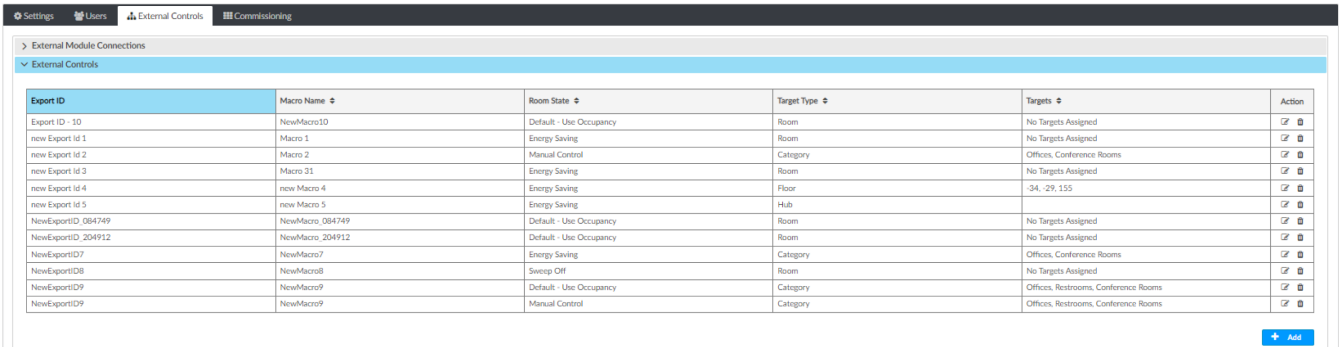

Export ID	Macro Name	Room State	Target Type	Targets	Action
Export ID - 10	NewMacro10	Default - Use Occupancy	Room	No Targets Assigned	
new Export Id 1	Macro 1	Energy Saving	Room	No Targets Assigned	
new Export Id 2	Macro 2	Manual Control	Category	Offices, Conference Rooms	
new Export Id 3	Macro 31	Energy Saving	Room	No Targets Assigned	
new Export Id 4	new Macro 4	Energy Saving	Floor	-34, -29, 155	
new Export Id 5	new Macro 5	Energy Saving	Hub		
NewExportID_084749	NewMacro_084749	Default - Use Occupancy	Room	No Targets Assigned	
NewExportID_204912	NewMacro_204912	Default - Use Occupancy	Room	No Targets Assigned	
NewExportID7	NewMacro7	Energy Saving	Category	Offices, Conference Rooms	
NewExportID8	NewMacro8	Sweep Off	Room	No Targets Assigned	
NewExportID9	NewMacro9	Default - Use Occupancy	Category	Offices, Restrooms, Conference Rooms	
NewExportID9	NewMacro9	Manual Control	Category	Offices, Restrooms, Conference Rooms	

Add Macro

To add a new macro:

1. Open **Settings View**.
2. Click the **External Controls** tab and expand the **External Controls** menu.
3. Click + Add. A new row appears.
4. Configure the macros settings:
    - Enter the Export ID.
    - Enter the Macro Name.
    - Select a Room State.
    - Target Type: Room Category, Room Floor, or Hub.
    - Enter Targets.
5. Click ✓ to save or ✗ to cancel.

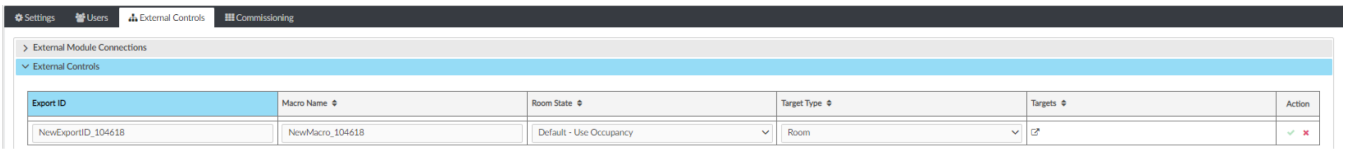

Edit Existing Macro

To edit an existing macro:

1. Open **Settings View**.
2. Click the **External Controls** tab and expand the **External Controls** menu.
3. Click ✎.
4. Enter new values in the fields.
5. Click ✓ to save or ✗ to cancel.

Delete Existing Macro

To delete an existing macro:

1. Open **Settings View**.
2. Click the **External Controls** tab and expand the **External Controls** menu.
3. Click 🗑. A confirmation window opens.
4. Click **Yes** to delete the macro or **No** to cancel.

BACnet Configuration

The BACnet tab displays the system settings to establish a connection with the BMS (building management system). To configure BACnet service:

1. Open **Settings View**.
2. Click the **External Controls** tab and expand the **BACnet Configuration** menu.

3. Configure the BACnet settings:

> **NOTE:** Use the search to find a specific room.

- BACnet Service: Click the toggle to turn the BACnet service on or off.
- Host ID: The ID that the ZUM-HUB4 uses when communicating with the BACnet system.
- Port Number: The port number that is used when communicating with the BACnet system.
- Export Settings: Export the BACnet settings to a CSV (comma separated value) file.
- Reserved Objects: Display objects that send signals to the ZUM-HUB4.
- BACnet Enabled Rooms: The number of rooms with BACnet.
- Property List: Allows users to select which objects are enabled for all rooms.
- Room Name: The name of the room.
- Base ID: Orders the device in the system and assigns the object IDs.
- ID Range: The range of Object IDs that the room can use.
- Object List: Displays a list of all Object IDs, Object Names, and Object Types within the selected room. A blue checkmark indicates objects that are enabled.

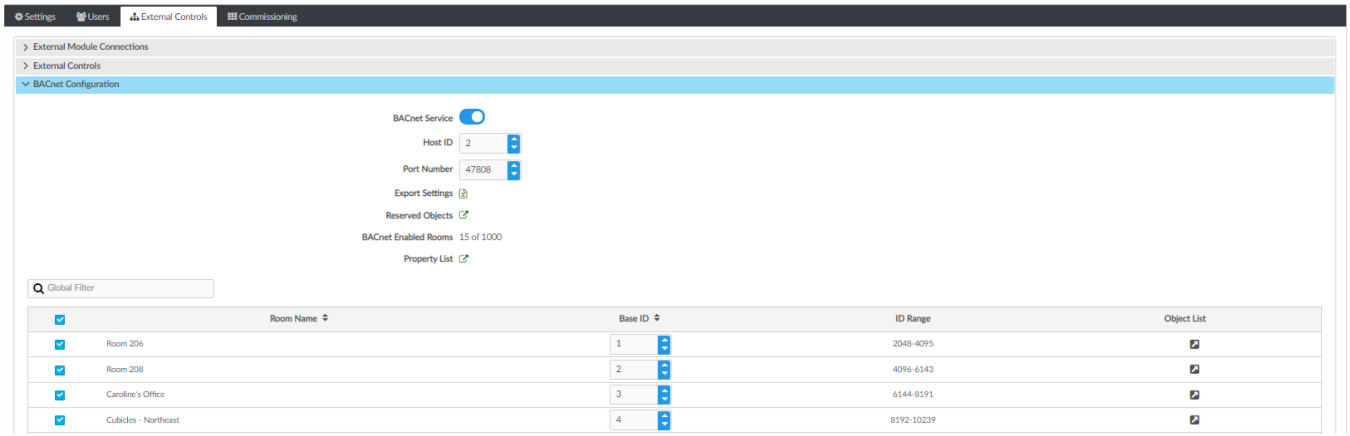

Room Mirroring Configuration

Room Mirroring allows an external processor to send or receive information from an existing Zūm room.

1. Open **Settings View**.
2. Click the **External Controls** tab and expand the **Room Mirroring Configuration** menu.
3. Click the toggle to turn **Allow Mirroring** on or off .

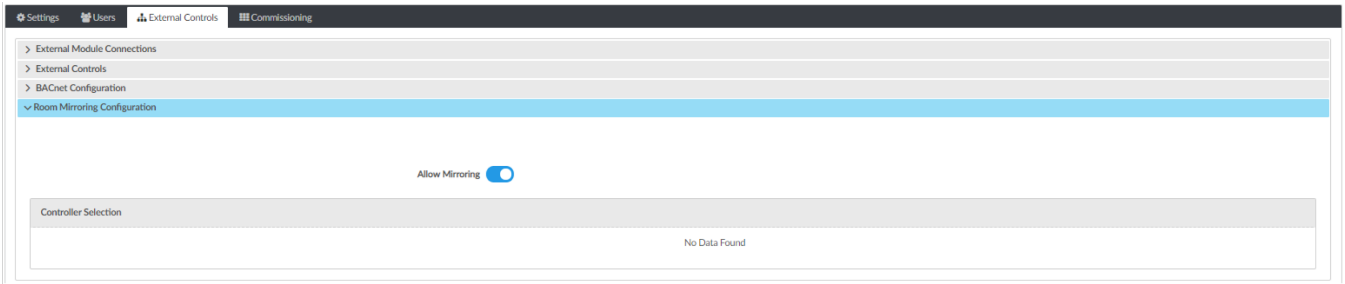

Manage Commissioning

Access Commissioning in the Settings View. Use the Commissioning tab to manage, map, and deploy, room templates. To create a new template, use the Zūm app.

Template Management

Upload a new template or search, extract, edit, or delete an existing template.

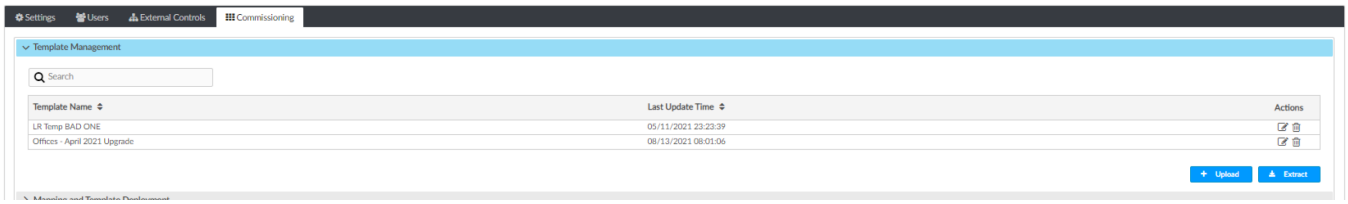

Add a New Template

To add a new room template:

1. Open **Settings View**.
2. Click the **Commissioning** tab and expand the **Template Management** menu.
3. Click **Upload**. The Upload window opens.
4. Click **Choose** to browse for a new template.
5. Select the template.
6. Click **Upload** to add the template to the **Template Management** menu, **Cancel** to choose a different template, or **Close** to close the window without adding a new template.

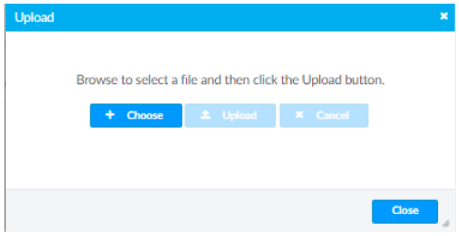

Edit Template Name

To edit an existing template name:

1. Open **Settings View**.
2. Click the **Commissioning** tab and expand the **Template Management** menu.
3. If necessary, use the **Search** bar to find a room template.
4. Click .

5. Type the new name.
6. Click **Save** to save the new name or **Cancel** to close the window without saving a new name.

Delete Existing Template

To delete an existing template:

1. Open **Settings View**.
2. Click the **Commissioning** tab and expand the **Template Management** menu.
3. If necessary, use the **Search** bar to find a room template.
4. Click . A confirmation window opens.
5. Click **Yes** to delete the template or **Cancel** to close the window.

Extract Template

To extract a room template from another room:

1. Open **Settings View**.
2. Click the **Commissioning** tab and expand the **Template Management** menu.
3. If necessary, use the **Search** bar to find a room template.
4. Click **Extract**. The Extract Template window opens.
5. Select a room.
6. Click **Extract** to extract the template or **Cancel** to close the window.

Mapping and Template Deployment

Use Mapping and Template Deployment to apply and deploy templates to rooms and to import mapping files.

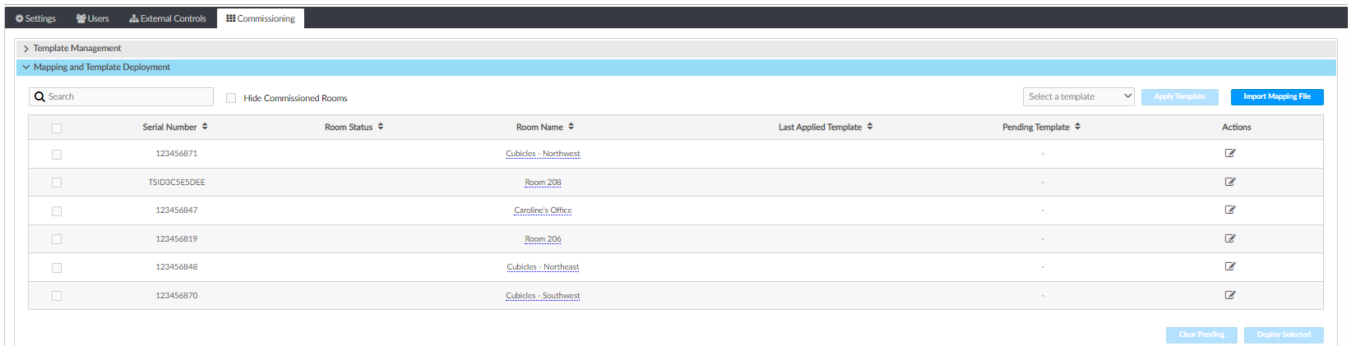

Apply and Deploy Templates.

To apply and deploy a template:

1. Open **Settings View**.
2. Click the **Commissioning** tab and expand the **Mapping and Template Deployment** menu.
3. Select a room or multiple rooms. If necessary, use the **Search** bar to find a room.
4. From the **Select a template** drop-down menu, choose the desired template.
5. Click **Apply Template**. When the template is successfully applied, the template is now pending.

6. Click **Deploy Selected** to deploy the template to the rooms or **Clear Pending** to remove the template from the rooms.

Edit Template Assignment

To edit a template assignment:

1. Open **Settings View**.
2. Click the **Commissioning** tab and expand the **Mapping and Template Deployment** menu.
3. Click beside the desired room. If necessary, use the **Search** bar to find the room. A window opens.
4. From the **Select Template** drop-down menu, choose the desired template.

   The remaining data specifies the room information, the devices and components affected, and the selected template details.
5. Click **Save** to reassign the room template or **Cancel** to close the window without saving.

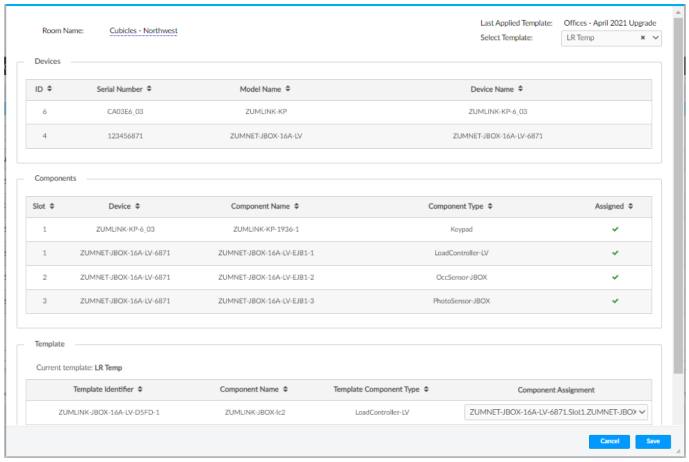

Import Mapping File

Access Import Mapping File in the Settings View. Open the Commissioning tab and expand the **Mapping and Template Deployment** menu. If a mapping file has been created in an external file, use the **Import Mapping File** button to navigate to the mapping and import the file.

Review Device Information and Status

View the Demand Response status, system alerts, help information, or sign out of the web interface.

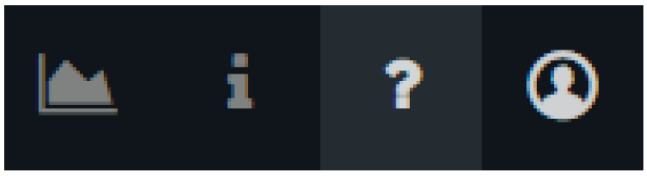

Demand Response Status

Demand Response is enabled.

Demand Response is disabled.

System Information

System notifications are categorized as information, warnings, or errors. Notifications can be viewed all at once or in their respective categories. Each notification is displayed for 24 hours and up to 100 notifications can be viewed at a time. Each notification after 100 will replace the oldest notification. For example, when notification 101 displays, notification 1 is removed. Delete a single notification by clicking the **X** to the right of the notification. Alternatively, delete one or more notifications by selecting the check box to the left of the notification and clicking **Delete Notifications**.

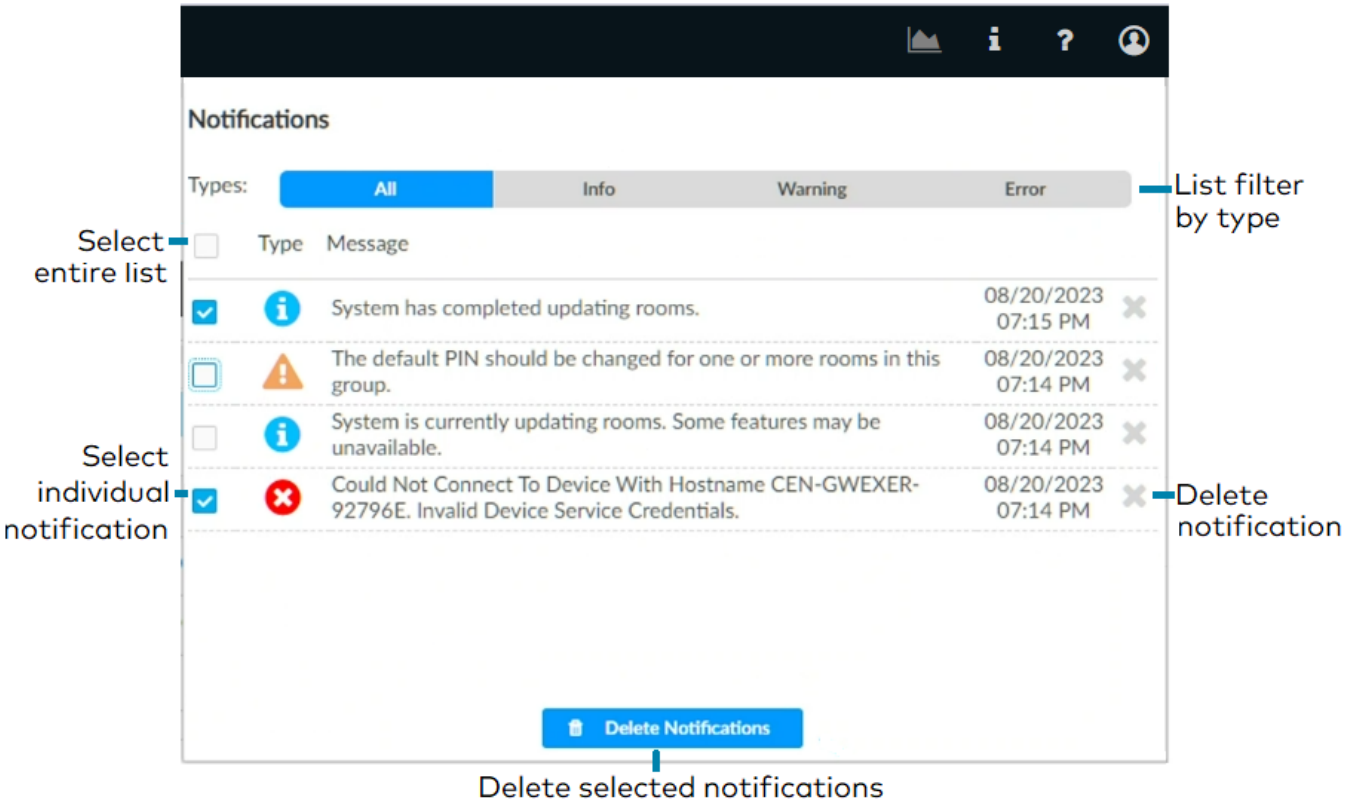

Help

Click to view the help file.

Sign Out

Click to bring up the Sign Out pop-up. Click Sign Out to log out of the ZUM-HUB4.

Reboot ZUM-HUB4

To reboot the ZUM-HUB4:

1. Click the **Actions** menu

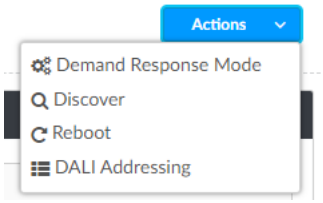

2. Click **Reboot**. The Confirmation window opens.

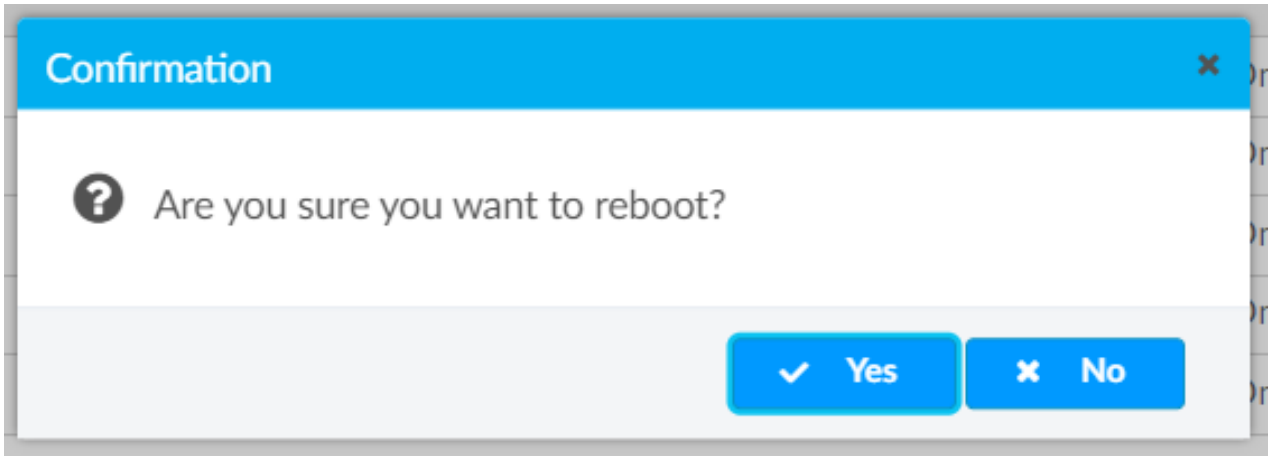

3. Click **Yes** to Reboot or **No** to close the window without rebooting.

Resources

Below are resources provided for Crestron Zūm® Lighting Control.

> **NOTE:** You may need to provide your Crestron.com web account credentials when prompted to access some of the following resources.

Crestron Support and Training

- Crestron True Blue Support
- Crestron Resource Library
- Crestron Online Help (OLH)
  OLH Lighting Help Index
- Crestron Training Institute (CTI) Portal

Programmer and Developer Resources

- help.crestron.com: Provides help files for Crestron programming tools such as SIMPL, SIMPL#, and Crestron Toolbox™ software
- developer.crestron.com: Provides developer documentation for Crestron APIs, SDKs, and other development tools

Product Certificates

To search for product certificates, refer to the Product Certificates section of the Crestron Resource Library.

Related Documentation

Energy standards for Zūm Wired solutions

IECC 2021

- Education Applications
- Healthcare Applications
- Hospitality Applications
- Office Applications
- Restaurant Applications
- Retail Applications

ASHRAE 2019

- Education Applications
- Healthcare Applications
- Hospitality Applications
- Office Applications
- Restaurant Applications
- Retail Applications

Title 24 2019

- Education Applications
- Healthcare Applications
- Hospitality Applications
- Office Applications
- Restaurant Applications
- Retail Applications

IECC 2018

- Education Applications
- Healthcare Applications
- Hospitality Applications
- Office Applications
- Restaurant Applications
- Retail Applications

Models

Below are the available products for Crestron Zūm® Lighting Control.

Load Controllers

Part Number	Model	Description
6511166	ZUMNET-JBOX-16A-LV	Zūm® Wired J-Box Load Controller, 0-10V Dimmer, 16A, 100-277V with Net and Link Communication
6511170	ZUMNET-JBOX-DALI	Zūm® Wired J-Box Controller with DALI® Drivers, 120-277V with Net and Link Communication
6511167	ZUMLINK-JBOX-16A-LV	Zūm® Wired J-Box Load Controller, 0-10V Dimmer, 16A, 100-277V with Link Communication
6511168	ZUMLINK-JBOX-20A-SW	Zūm® Wired J-Box Load Controller, High Inrush Switch, 20A, 100-277V with Link Communication
6511169	ZUMLINK-JBOX-20A-PLUG	Zūm® Wired J-Box Load Controller, Plug Load Switch, 20A, 100-277VAC with Link Communication
6512078	ZUMLINK-EXP-16A-DIMU	Zūm® Wired Universal Dimmer Load Controller

Keypad

Part Number	Model	Description
6511187	ZUMLINK-KP-R-W	Zūm® Wired Keypad with Link Communication, Rocker Button

Presence Detectors

Part Number	Model	Description
6511729	ZUMLINK-IR-QUATTRO-DLS	Infrared Presence Detector with Daylight Sensing and Link Communication for Zūm® Wired Lighting Control
6511730	ZUMLINK-DT-QUATTRO-DLS	Dual-Tech Presence Detector with Daylight Sensing and Link Communication for Zūm® Wired Lighting Control
6511731	ZUMLINK-US-QUATTRO-DLS	Ultrasonic Presence Detector with Daylight Sensing and Link Communication for Zūm® Wired Lighting Control
6511732	ZUMLINK-IR-QUATTRO-HD-DLS	High-Definition Infrared Presence Detector with Daylight Sensing and Link Communication for Zūm® Wired Lighting Control

Part Number	Model	Description
6511733	ZUMLINK-US-HALLWAY-DLS	Ultrasonic Dual-Direction Hallway Presence Detector with Daylight Sensing and Link Communication for Zūm® Wired Lighting Control
6511734	ZUMLINK-US-ONEWAY-DLS	Ultrasonic Single-Direction Hallway Presence Detector with Daylight Sensing and Link Communication for Zūm® Wired Lighting Control
6511735	ZUMLINK-IR-QUATTRO-DLS-RLY	Infrared Presence Detector with Daylight Sensing, HVAC Control, and Link Communication for Zūm® Wired Lighting Control
6511736	ZUMLINK-DT-QUATTRO-DLS-RLY	Dual-Tech Presence Detector with Daylight Sensing, HVAC Control, and Link Communication for Zūm® Wired Lighting Control
6511737	ZUMLINK-US-QUATTRO-DLS-RLY	Ultrasonic Presence Detector with Daylight Sensing, HVAC Control, and Link Communication for Zūm® Wired Lighting Control
6511738	ZUMLINK-IR-QUATTRO-HD-DLS-RLY	High-Definition Infrared Presence Detector with Daylight Sensing, HVAC Control, and Link Communication for Zūm® Wired Lighting Control
6511739	ZUMLINK-US-HALLWAY-DLS-RLY	Ultrasonic Dual-Direction Hallway Presence Detector with Daylight Sensing, HVAC Control, and Link Communication for Zūm® Wired Lighting Control
6511740	ZUMLINK-US-ONEWAY-DLS-RLY	Ultrasonic Single-Direction Hallway Presence Detector with Daylight Sensing, HVAC Control, and Link Communication for Zūm® Wired Lighting Control

Hub and Kits

Part Number	Model	Description
6511480	ZUM-HUB4	4-Series® Control Processor for Zūm® Lighting Control System
6512648	ZUML-HUB4-GW	4-Series® Control Processor for Zūm® Lighting Control System with Wireless Gateway and Power Supply
6512646	ZUML-HUB4-PAK	Zūm® Lighting Control Processor Panel, Basic
6512647	ZUML-HUB4-CN-PAK	Zūm® Lighting Control Processor Panel, Expanded

Software

Part Number	Model	Description
	CRESTRON-ZUM	Crestron Zūm® Lighting Configuration App
3002182	SW-HUB4-PROG	Custom Program License for ZUM-HUB4

Power Supply

Part Number	Model	Description
6512056	ZUMLINK-JBOX-PSU	Zūm® Wired J-Box Power Supply

Cables

Part Number	Model	Description
6511388	CBL-CAT5E-ZUMNET-P-25	CAT5e Cable with Net Communication for LAN Wiring Zūm® Control Systems, Plenum, Purple, 25 ft
6511389	CBL-CAT5E-ZUMNET-P-50	CAT5e Cable with Net Communication for LAN Wiring Zūm® Control Systems, Plenum, Purple, 50 ft
6511390	CBL-CAT5E-ZUMNET-P -100	CAT5e Cable with Net Communication for LAN Wiring Zūm® Control Systems, Plenum, Purple, 100 ft
6512907	CBL-CAT5E-ZUMNET-P-SP500	CAT5e Cable with Net Communication for LAN Wiring Zūm® Control Systems, Plenum, Purple, 500 ft, Spool
6511393	CBL-CAT5E-ZUMLINK-P -0.5	CAT5e Cable with Link Communication for In-Room Wiring Zūm® Control Systems, Plenum, Orange, 6 in
6511394	CBL-CAT5E-ZUMLINK-P-3	CAT5e Cable with Link Communication for In-Room Wiring Zūm® Control Systems, Plenum, Orange, 3 ft
6511395	CBL-CAT5E-ZUMLINK-P-6	CAT5e Cable with Link Communication for In-Room Wiring Zūm® Control Systems, Plenum, Orange, 6 ft
6511396	CBL-CAT5E-ZUMLINK-P-12	CAT5e Cable with Link Communication for In-Room Wiring Zūm® Control Systems, Plenum, Orange, 12 ft
6511397	CBL-CAT5E-ZUMLINK-P-25	CAT5e Cable with Link Communication for In-Room Wiring Zūm® Control Systems, Plenum, Orange, 25 ft
6511398	CBL-CAT5E-ZUMLINK-P-50	CAT5e Cable with Link Communication for In-Room Wiring Zūm® Control Systems, Plenum, Orange, 50 ft
6511617	CBL-CAT5E-ZUMLINK-P -12-10PK	CAT5e Cable with Link Communication for In-Room Wiring Zūm® Control Systems, Plenum, Orange, 12 ft, 10 Pack
6511618	CBL-CAT5E-ZUMLINK-P -25-10PK	CAT5e Cable with Link Communication for In-Room Wiring Zūm® Control Systems, Plenum, Orange, 25 ft, 10 Pack
6512908	CBL-CAT5E-ZUMLINK-P-SP500	CAT5e Cable with Link Communication for In-Room Wiring Zūm® Control Systems, Plenum, Orange, 500 ft, Spool

Cable Accessories

Part Number	Model	Description
6512025	ZUMLINK-CONV-CN	Zūm® Wired Adapter Cable for Cresnet® Devices
6512080	ZUMLINK-SPLTR-RJ45	Zūm® Wired RJ-45 Splitter

Rocker and Button Trees

Part Number	Model	Description
6511193	ZUMLINK-BTNR-W ENGRAVED	Rocker Button with Bezel for Zūm® Light Control Keypads (ZUMLINK-KP), Engraved, White
6511194	ZUMLINK-BTNR-B ENGRAVED	Rocker Button with Bezel for Zūm® Light Control Keypads (ZUMLINK-KP), Engraved, Black
6511195	ZUMLINK-BTNR-A ENGRAVED	Rocker Button with Bezel for Zūm® Light Control Keypads (ZUMLINK-KP), Engraved, Almond
6511196	ZUMLINK-BTNR-G ENGRAVED	Rocker Button with Bezel for Zūm® Light Control Keypads (ZUMLINK-KP), Engraved, Gray
6511197	ZUMLINK-BTNR-R ENGRAVED	Rocker Button with Bezel for Zūm® Light Control Keypads (ZUMLINK-KP), Engraved, Red
6512412	ZUMLINK-BTN2-W ENGRAVED	Two Button Tree with Bezel for Zūm® Light Control Keypads (ZUMLINK-KP), Engraved, White
6512413	ZUMLINK-BTN2-B ENGRAVED	Two Button Tree with Bezel for Zūm® Light Control Keypads (ZUMLINK-KP), Engraved, Black
6512414	ZUMLINK-BTN2-A ENGRAVED	Two Button Tree with Bezel for Zūm® Light Control Keypads (ZUMLINK-KP), Engraved, Almond
6512415	ZUMLINK-BTN2-G ENGRAVED	Two Button Tree with Bezel for Zūm® Light Control Keypads (ZUMLINK-KP), Engraved, Gray
6512416	ZUMLINK-BTN2-R ENGRAVED	Two Button Tree with Bezel for Zūm® Light Control Keypads (ZUMLINK-KP), Engraved, R
6511203	ZUMLINK-BTN4-W ENGRAVED	Four Button Tree with Bezel for Zūm® Light Control Keypads (ZUMLINK-KP), Engraved, White
6511204	ZUMLINK-BTN4-B ENGRAVED	Four Button Tree with Bezel for Zūm® Light Control Keypads (ZUMLINK-KP), Engraved, Black
6511205	ZUMLINK-BTN4-A ENGRAVED	Four Button Tree with Bezel for Zūm® Light Control Keypads (ZUMLINK-KP), Engraved, Almond
6511206	ZUMLINK-BTN4-G ENGRAVED	Four Button Tree with Bezel for Zūm® Light Control Keypads (ZUMLINK-KP), Engraved, Gray
6511207	ZUMLINK-BTN4-R ENGRAVED	Four Button Tree with Bezel for Zūm® Light Control Keypads (ZUMLINK-KP), Engraved, Red

Part Number	Model	Description
6511213	ZUMLINK-BTN6-W ENGRAVED	Six Button Tree with Bezel for Zūm® Light Control Keypads (ZUMLINK-KP), Engraved, White
6511214	ZUMLINK-BTN6-B ENGRAVED	Six Button Tree with Bezel for Zūm® Light Control Keypads (ZUMLINK-KP), Engraved, Black
6511215	ZUMLINK-BTN6-A ENGRAVED	Six Button Tree with Bezel for Zūm® Light Control Keypads (ZUMLINK-KP), Engraved, Almond
6511216	ZUMLINK-BTN6-G ENGRAVED	Six Button Tree with Bezel for Zūm® Light Control Keypads (ZUMLINK-KP), Engraved, Gray
6511217	ZUMLINK-BTN6-R ENGRAVED	Six Button Tree with Bezel for Zūm® Light Control Keypads (ZUMLINK-KP), Engraved,Red
6511223	ZUMLINK-BTN8-W ENGRAVED	Eight Button Tree with Bezel for Zūm® Light Control Keypads (ZUMLINK-KP), Engraved, White
6511224	ZUMLINK-BTN8-B ENGRAVED	Eight Button Tree with Bezel for Zūm® Light Control Keypads (ZUMLINK-KP), Engraved, Black
6511225	ZUMLINK-BTN8-A ENGRAVED	Eight Button Tree with Bezel for Zūm® Light Control Keypads (ZUMLINK-KP), Engraved, Almond
6511226	ZUMLINK-BTN8-G ENGRAVED	Eight Button Tree with Bezel for Zūm® Light Control Keypads (ZUMLINK-KP), Engraved, Gray
6511227	ZUMLINK-BTN8-R ENGRAVED	Eight Button Tree with Bezel for Zūm® Light Control Keypads (ZUMLINK-KP), Engraved, Engraved, Red
6512417	ZUMLINK-BTN2-W	Two Button Tree with Bezel for Zūm® Light Control Keypads (ZUMLINK-KP), Pad Printed, White
6512418	ZUMLINK-BTN2-B	Two Button Tree with Bezel for Zūm® Light Control Keypads (ZUMLINK-KP), Pad Printed, Black
6512419	ZUMLINK-BTN2-A	Two Button Tree with Bezel for Zūm® Light Control Keypads (ZUMLINK-KP), Pad Printed, Almond
6512420	ZUMLINK-BTN2-G	Two Button Tree with Bezel for Zūm® Light Control Keypads (ZUMLINK-KP), Pad Printed, Gray
6512421	ZUMLINK-BTN2-R	Two Button Tree with Bezel for Zūm® Light Control Keypads (ZUMLINK-KP), Pad Printed, Red
6511233	ZUMLINK-BTN4-W	Four Button Tree with Bezel for Zūm® Light Control Keypads (ZUMLINK-KP), Pad Printed, White
6511234	ZUMLINK-BTN4-B	Four Button Tree with Bezel for Zūm® Light Control Keypads (ZUMLINK-KP), Pad Printed, Black
6511235	ZUMLINK-BTN4-A	Four Button Tree with Bezel for Zūm® Light Control Keypads (ZUMLINK-KP), Pad Printed, Almond
6511236	ZUMLINK-BTN4-G	Four Button Tree with Bezel for Zūm® Light Control Keypads (ZUMLINK-KP), Pad Printed, Gray

Part Number	Model	Description
6511237	ZUMLINK-BTN4-R	Four Button Tree with Bezel for Zūm® Light Control Keypads (ZUMLINK-KP), Pad Printed, Red
6511238	ZUMLINK-BTN6-W	Six Button Tree with Bezel for Zūm® Light Control Keypads (ZUMLINK-KP), Pad Printed, White
6511239	ZUMLINK-BTN6-B	Six Button Tree with Bezel for Zūm® Light Control Keypads (ZUMLINK-KP), Pad Printed, Black
6511240	ZUMLINK-BTN6-A	Six Button Tree with Bezel for Zūm® Light Control Keypads (ZUMLINK-KP), Pad Printed, White
6511241	ZUMLINK-BTN6-G	Six Button Tree with Bezel for Zūm® Light Control Keypads (ZUMLINK-KP), Pad Printed, Gray
6511242	ZUMLINK-BTN6-R	Six Button Tree with Bezel for Zūm® Light Control Keypads (ZUMLINK-KP), Pad Printed, Red
6511243	ZUMLINK-BTN8-W	Eight Button Tree with Bezel for Zūm® Light Control Keypads (ZUMLINK-KP), Pad Printed White
6511244	ZUMLINK-BTN8-B	Eight Button Tree with Bezel for Zūm® Light Control Keypads (ZUMLINK-KP), Pad Printed, Black
6511245	ZUMLINK-BTN8-A	Eight Button Tree with Bezel for Zūm® Light Control Keypads (ZUMLINK-KP), Pad Printed, Almond
6511246	ZUMLINK-BTN8-G	Eight Button Tree with Bezel for Zūm® Light Control Keypads (ZUMLINK-KP), Pad Printed, Gray
6511247	ZUMLINK-BTN8-R	Eight Button Tree with Bezel for Zūm® Light Control Keypads (ZUMLINK-KP), Pad Printed, Red
6511188	ZUMLINK-BTNR-W BLANK	Rocker Button with Bezel for Zūm® Light Control Keypads (ZUMLINK-KP), Blank, White
6511189	ZUMLINK-BTNR-B BLANK	Rocker Button with Bezel for Zūm® Light Control Keypads (ZUMLINK-KP), Blank, Black
6511190	ZUMLINK-BTNR-A BLANK	Rocker Button with Bezel for Zūm® Light Control Keypads (ZUMLINK-KP), Blank, Almond
6511191	ZUMLINK-BTNR-G BLANK	Rocker Button with Bezel for Zūm® Light Control Keypads (ZUMLINK-KP), Blank, Gray
6511192	ZUMLINK-BTNR-R BLANK	Rocker Button with Bezel for Zūm® Light Control Keypads (ZUMLINK-KP), Blank, Red
6512574	ZUMLINK-BTN2-W BLANK	Two Button Tree with Bezel for Zūm® Light Control Keypads (ZUMLINK-KP), Blank, White
6512575	ZUMLINK-BTN2-B BLANK	Two Button Tree with Bezel for Zūm® Light Control Keypads (ZUMLINK-KP), Blank, Black
6512576	ZUMLINK-BTN2-A BLANK	Two Button Tree with Bezel for Zūm® Light Control Keypads (ZUMLINK-KP), Blank, Almond

Part Number	Model	Description
6512577	ZUMLINK-BTN2-G BLANK	Two Button Tree with Bezel for Zūm® Light Control Keypads (ZUMLINK-KP), Blank, Gray
6512578	ZUMLINK-BTN2-R BLANK	Two Button Tree with Bezel for Zūm® Light Control Keypads (ZUMLINK-KP), Blank, Red
6512579	ZUMLINK-BTN4-W BLANK	Four Button Tree with Bezel for Zūm® Light Control Keypads (ZUMLINK-KP), Blank, White
6512580	ZUMLINK-BTN4-B BLANK	Four Button Tree with Bezel for Zūm® Light Control Keypads (ZUMLINK-KP), Blank, Black
6512581	ZUMLINK-BTN4-A BLANK	Four Button Tree with Bezel for Zūm® Light Control Keypads (ZUMLINK-KP), Blank, Almond
6512582	ZUMLINK-BTN4-G BLANK	Four Button Tree with Bezel for Zūm® Light Control Keypads (ZUMLINK-KP), Blank, Gray
6512583	ZUMLINK-BTN4-R BLANK	Four Button Tree with Bezel for Zūm® Light Control Keypads (ZUMLINK-KP), Blank, Red
6512584	ZUMLINK-BTN6-W BLANK	Six Button Tree with Bezel for Zūm® Light Control Keypads (ZUMLINK-KP), Blank, White
6512585	ZUMLINK-BTN6-B BLANK	Six Button Tree with Bezel for Zūm® Light Control Keypads (ZUMLINK-KP), Blank, Black
6512586	ZUMLINK-BTN6-A BLANK	Six Button Tree with Bezel for Zūm® Light Control Keypads (ZUMLINK-KP), Blank, Almond
6512587	ZUMLINK-BTN6-G BLANK	Six Button Tree with Bezel for Zūm® Light Control Keypads (ZUMLINK-KP), Blank, Gray
6512588	ZUMLINK-BTN6-R BLANK	Six Button Tree with Bezel for Zūm® Light Control Keypads (ZUMLINK-KP), Blank, Red
6512589	ZUMLINK-BTN8-W BLANK	Eight Button Tree with Bezel for Zūm® Light Control Keypads (ZUMLINK-KP), Blank, White
6512590	ZUMLINK-BTN8-B BLANK	Eight Button Tree with Bezel for Zūm® Light Control Keypads (ZUMLINK-KP), Blank, Black
6512591	ZUMLINK-BTN8-A BLANK	Eight Button Tree with Bezel for Zūm® Light Control Keypads (ZUMLINK-KP), Blank, Almond
6512592	ZUMLINK-BTN8-G BLANK	Eight Button Tree with Bezel for Zūm® Light Control Keypads (ZUMLINK-KP), Blank, Gray
6512593	ZUMLINK-BTN8-R BLANK	Eight Button Tree with Bezel for Zūm® Light Control Keypads (ZUMLINK-KP), Blank, Red

Wired Field Guide

The following sections provide best practices for setting up a Zūm Wired space.

- Load Controllers
  - ZUMNET-JBOX-16A-LV and ZUMNET-JBOX-DALI Wiring
    - ZUMNET-JBOX-16A-LV
    - ZUMNET-JBOX-DALI
  - ZUMLINK-JBOX-16A-LV, ZUMLINK-JBOX-20A-SW, ZUMLINK-JBOX-20A-PLUG, and ZUMLINK-EXP-16A-DIMU
    - ZUMLINK-JBOX-16A-LV
    - ZUMLINK-JBOX-20A-SW
    - ZUMLINK-JBOX-20A-PLUG
    - ZUMLINK-EXP-16A-DIMU
- Keypad and Buttons
  - ZUMLINK-KP-R
  - ZUMLINK-BTN2
  - ZUMLINK-BTN4
  - ZUMLINK-BTN6
  - ZUMLINK-BTN8
- Presence Detectors
  - ZUMLINK-IR-QUATTRO-DLS and ZUMLINK-IR-QUATTRO-DLS-RLY
  - ZUMLINK-IR-QUATTRO-HD-DLS and ZUMLINK-IR-QUATTRO-HD-DLS-RLY
  - ZUMLINK-DT-QUATTRO-DLS and ZUMLINK-DT-QUATTRO-DLS-RLY
  - ZUMLINK-US-QUATTRO-DLS and ZUMLINK-US-QUATTRO-DLS-RLY
  - ZUMLINK-US-ONEWAY-DLS and ZUMLINK-US-ONEWAY-DLS-RLY
  - ZUMLINK-US-HALLWAY-DLS and ZUMLINK-US-HALLWAY-DLS-RLY
- Non-system Standalone Wallbox Controllers
- ZUML Hub Kits
  - ZUML-HUB4-PAK
  - ZUML-HUB4-SWPOE-26
  - ZUML-SWPOE-26
- Power Supply
  - ZUMLINK-JBOX-PSU
- PoE Switch

Load Controllers

Below are illustrations for the Zūm wired load controllers. Refer to Load Controller Installation on page 96 for details.

ZUMNET-JBOX-16A-LV and ZUMNET-JBOX-DALI Wiring

(2) ZUMNET ports

(2) ZUMLINK ports (85mA Zūm Link power)

(1) 24V sensor power terminal (85mA max)

(1) Analog sensor input

(1) Daylight sensor input

(1) Override input

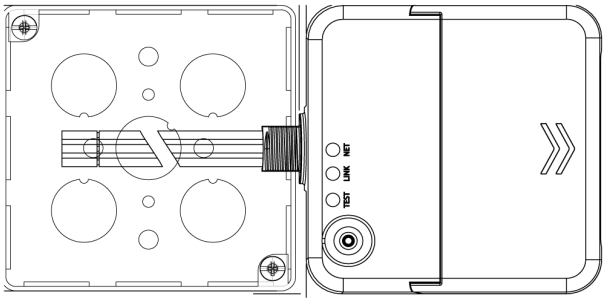

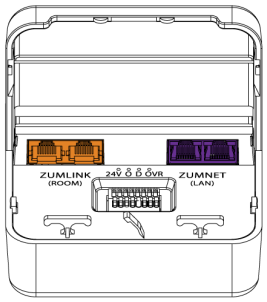

ZUMNET-JBOX-16A-LV

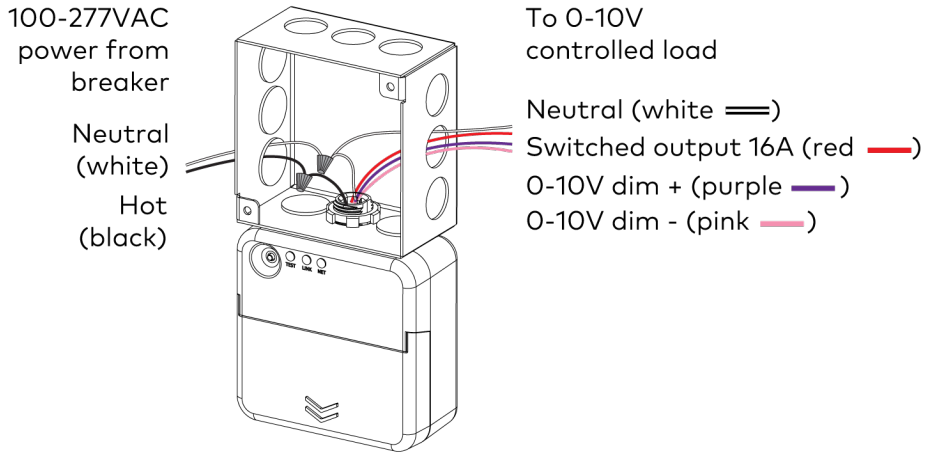

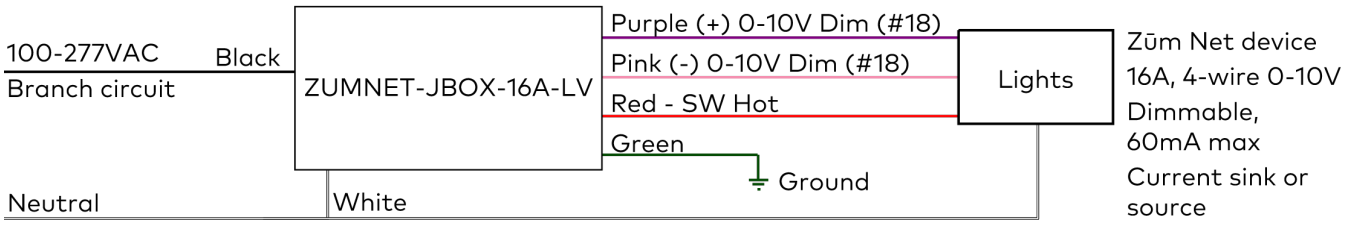

ZUMNET-JBOX-DALI

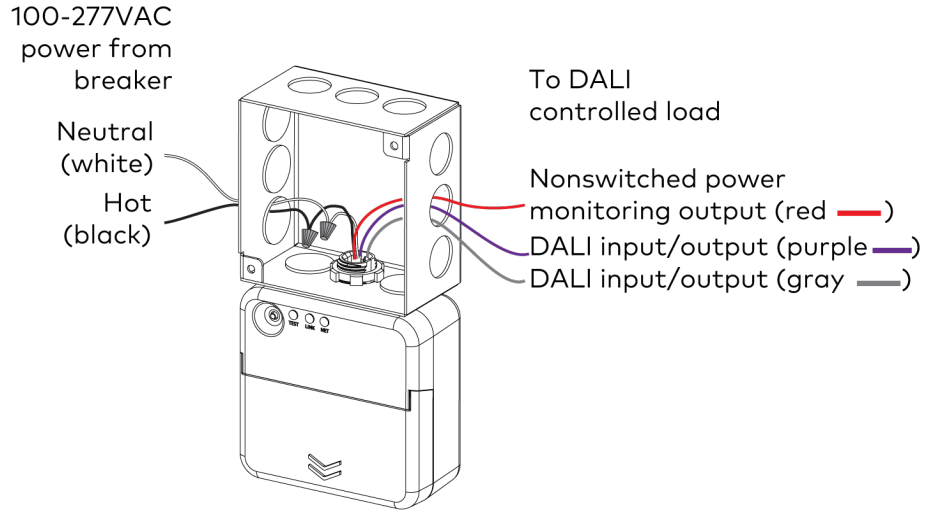

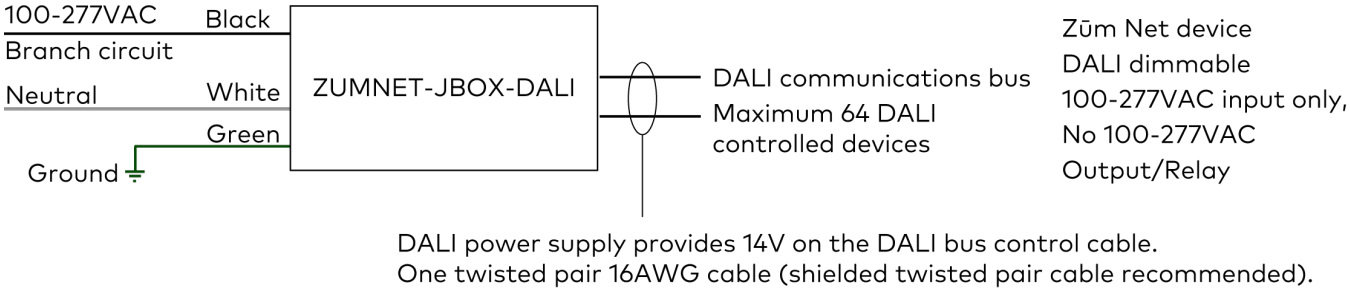

DALI power supply provides 14V on the DALI bus control cable.
One twisted pair 16AWG cable (shielded twisted pair cable recommended).

ZUMLINK-JBOX-16A-LV, ZUMLINK-JBOX-20A-SW, ZUMLINK-JBOX-20A-PLUG, and ZUMLINK-EXP-16A-DIMU

- (2) ZUMLINK ports (85mA Zūm Link power)
- (1) 24V sensor power terminal (85mA max)
- (1) Analog sensor input
- (1) Daylight sensor input
- (1) Override input

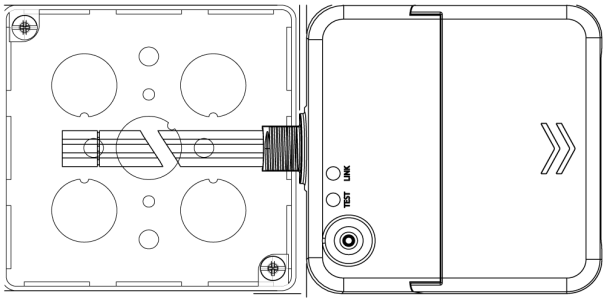

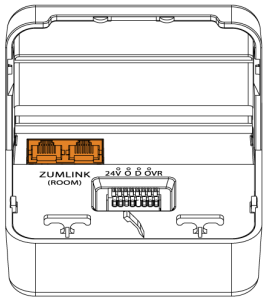

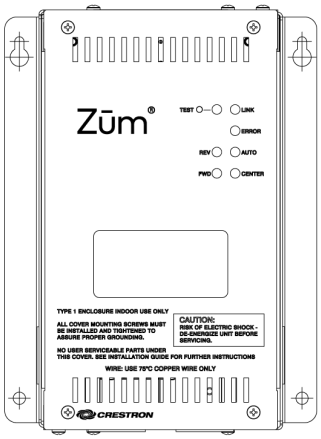

ZUMLINK-EXP-16A-DIMU

ZUMLINK-JBOX-16A-LV

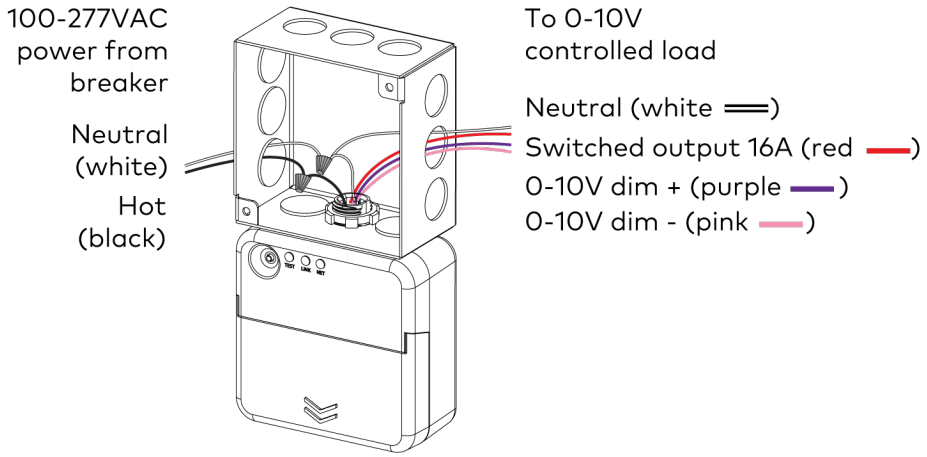

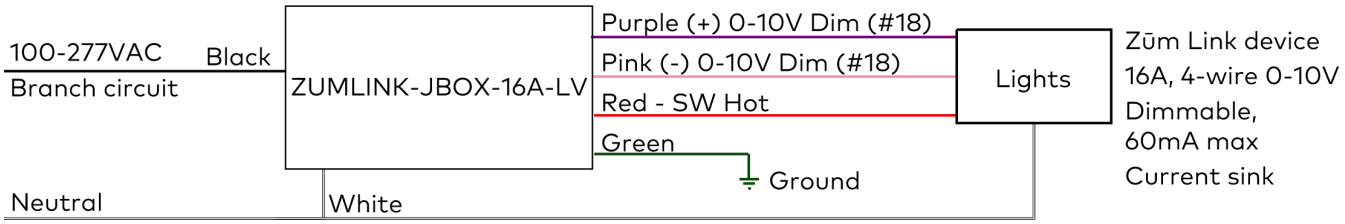

ZUMLINK-JBOX-20A-SW

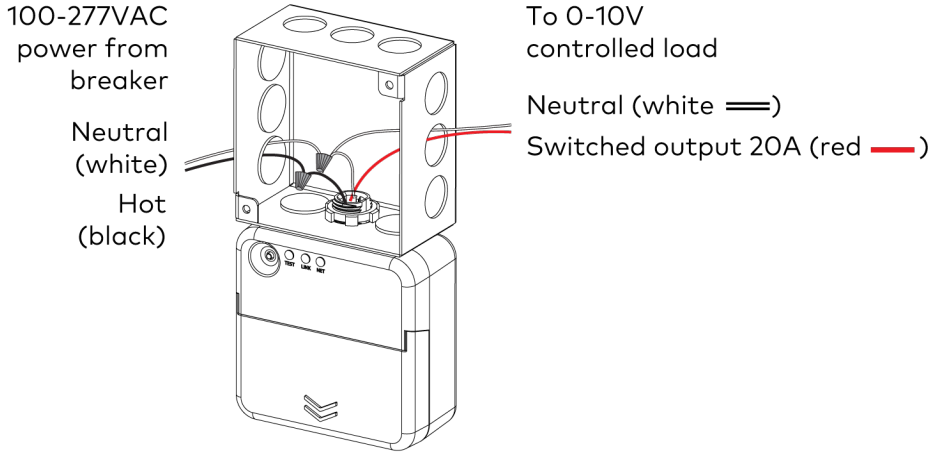

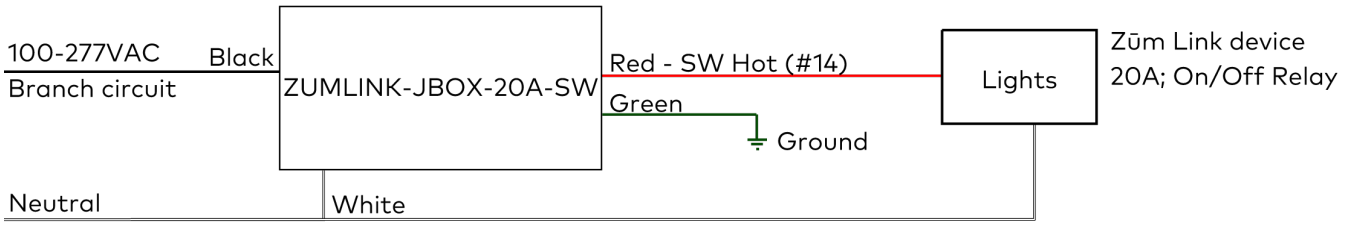

ZUMLINK-JBOX-20A-PLUG

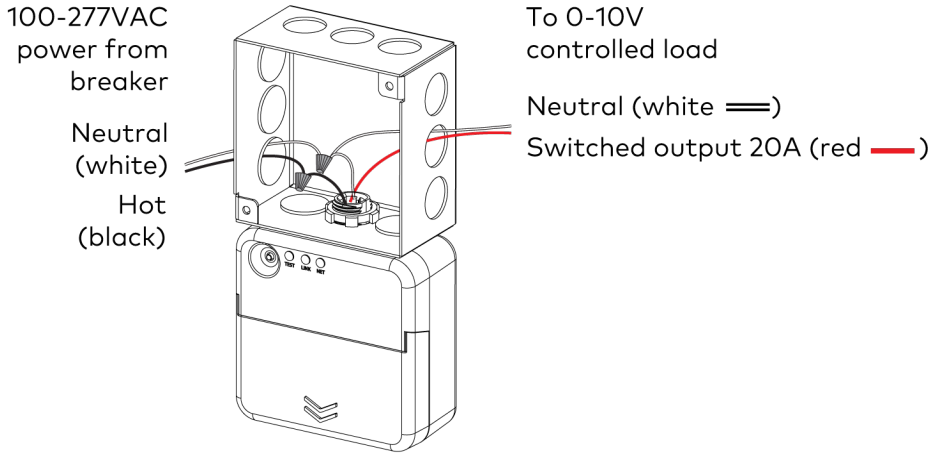

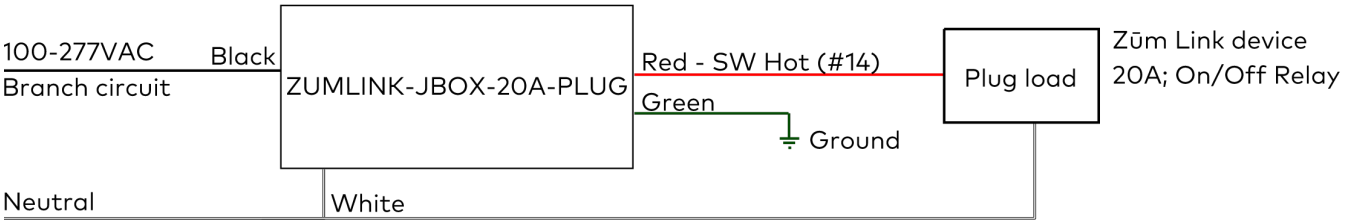

ZUMLINK-EXP-16A-DIMU

> **NOTE:** The ZUMLINK port does not produce Zūm Link power.

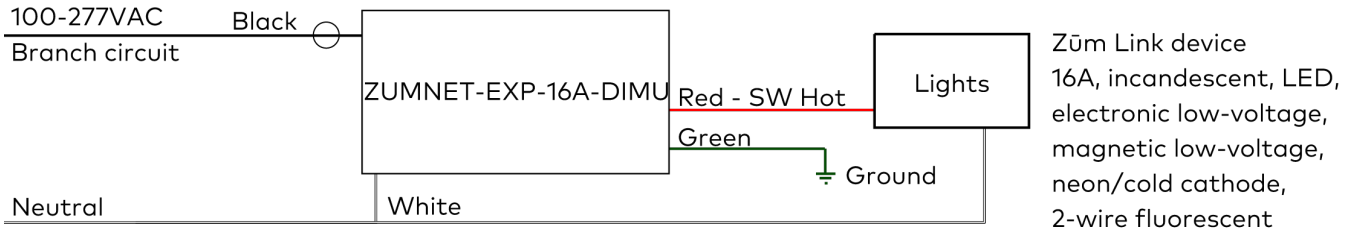

Keypad and Buttons

Below are illustrations for the Zūm wired keypad and button trees. Refer to Keypad Installation on page 111 and Rocker and Button Tree Installation on page 146 for details.

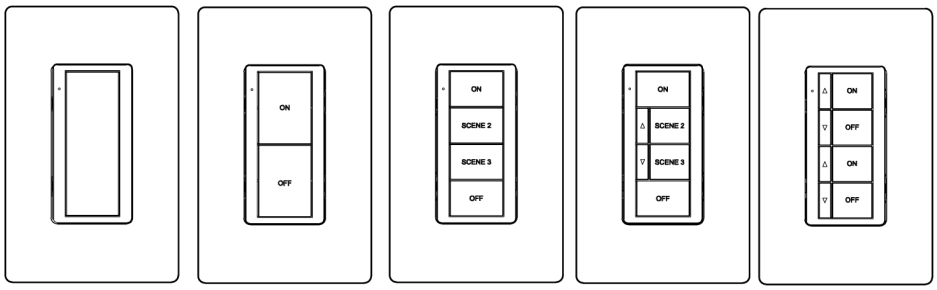

ZUMLINK-KP-R-W	ZUMLINK-KP-R-W + ZUMLINK-BTN2-W	ZUMLINK-KP-R-W + ZUMLINK-BTN4-W	ZUMLINK-KP-R-W + ZUMLINK-BTN6-W	ZUMLINK-KP-R-W + ZUMLINK-BTN6-W

ZUMLINK-KP-R

- Single rocker switch
- Default keypad assembly
- (2) ZUMLINK ports
- 5 mA Zūm Link power
- Faceplate not included

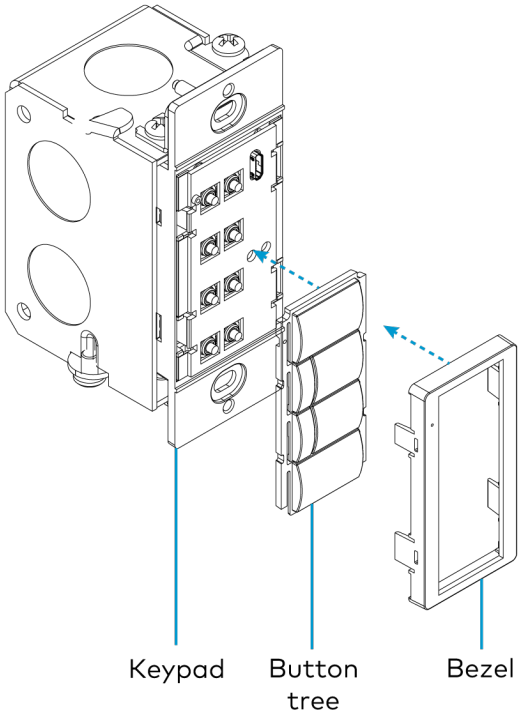

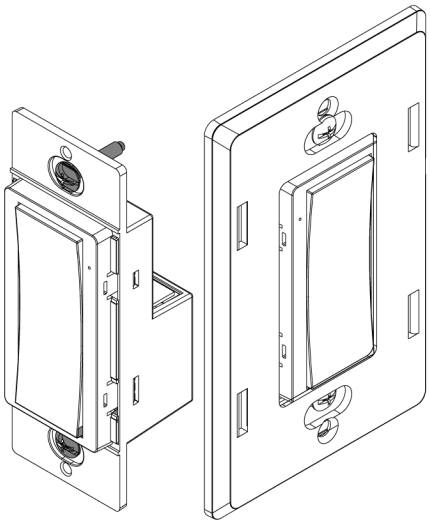

ZUMLINK-BTN2

Two button tree and bezel attaches to ZUMLINK-KP-R.

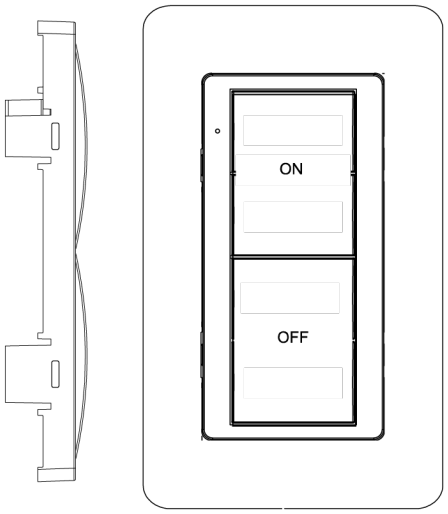

ON
OFF

Pad-printed ZUMLINK-BTN2 shown. Faceplate not included.

ZUMLINK-BTN4

Four button tree and bezel attaches to ZUMLINK-KP-R.

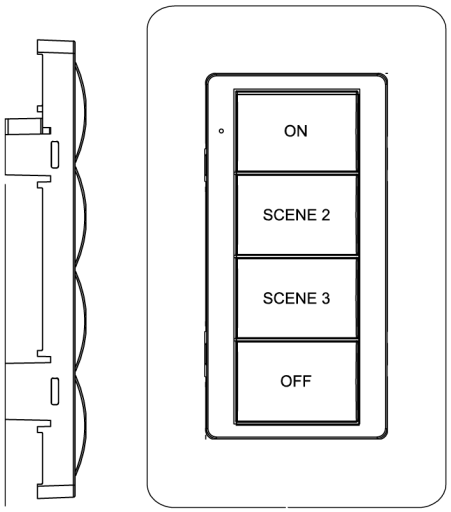

ON
OFF

Pad-printed ZUMLINK-BTN4 shown. Faceplate not included.

ZUMLINK-BTN6

Six button tree and bezel attaches to ZUMLINK-KP-R.

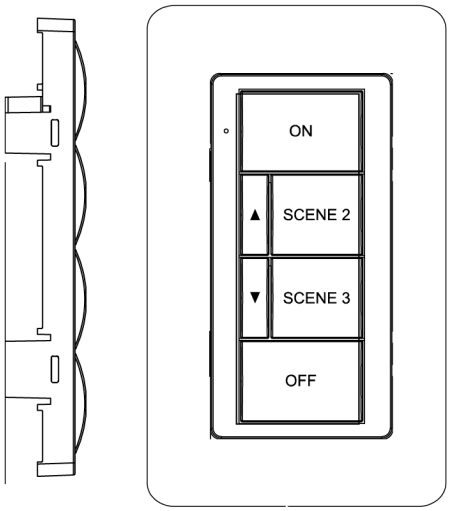

Pad-printed ZUMLINK-BTN6 shown. Faceplate not included.

ZUMLINK-BTN8

Eight button tree and bezel attaches to ZUMLINK-KP-R.

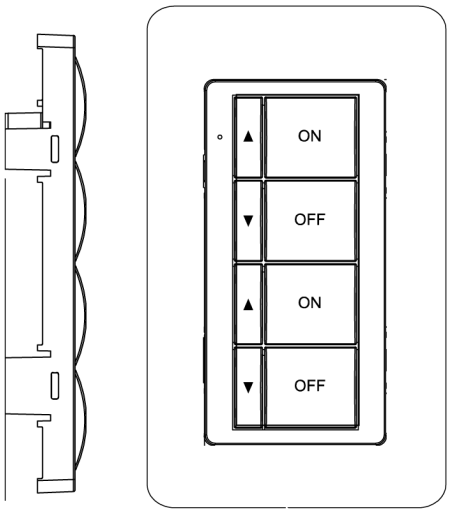

Pad-printed ZUMLINK-BTN8 shown. Faceplate not included.

Presence Detectors

CAUTION: When the daylight sensor component is in use, the presence detector counts as two devices.

ZUMLINK-IR-QUATTRO-DLS and ZUMLINK-IR-QUATTRO-DLS-RLY

- 18-24VDC/VAC (25 mA)
- Control output: 1A @ 30VAC/VDC
- RLY HVAC dry contacts: 1A @ 30VAC/VDC
- Passive Infrared (PIR)
- Presence maximum: 15 x 15 ft (225 sq ft)
- Radial maximum 15 x 15 ft (225 sq ft)
- Tangential maximum: 23 x 23 ft (529 sq ft)
- Closed-loop daylight sensor: 10-1,000 lux (1-100 fc)

ZUMLINK-IR-QUATTRO-HD-DLS and ZUMLINK-IR-QUATTRO-HD-DLS-RLY

- 18-24VDC/VAC (32 mA)
- Control output: 1A @ 30VAC/VDC
- RLY HVAC dry contacts: 1A @ 30VAC/VDC
- Passive Infrared (PIR)
- Presence maximum: 25.5 x 25.5 ft (650.25 sq ft)
- Radial maximum: 25.5 x 25.5 ft (650.25 sq ft)
- Tangential maximum: 65.5 x 65.5 ft (4,290.25 sq ft)
- Closed-loop daylight sensor: 10-1,000 lux (1-100 fc)

ZUMLINK-DT-QUATTRO-DLS and ZUMLINK-DT-QUATTRO-DLS-RLY

- 18-24VDC/VAC (30 mA)
- Control Output: 1A @ 30VAC/VDC
- RLY HVAC dry contacts: 1A @ 30VAC/VDC
- Passive Infrared (PIR) and Ultrasonic (US) 40 kHz
- US presence
    - Maximum: 20x 20 ft (400 sq ft),
    - Minimum: 6.5 x 6.5 ft (42.25 sq ft)
- US radial and tangential maximum: Up to 32 x 32 ft (1000 sq ft)
- PIR presence maximum: 10 x 10 ft (100 sq ft)
- PIR tangential maximum: 8 x 8 m (26 X 26 ft)
- Closed-loop daylight sensor: 10-1,000 lux (1-100 fc)

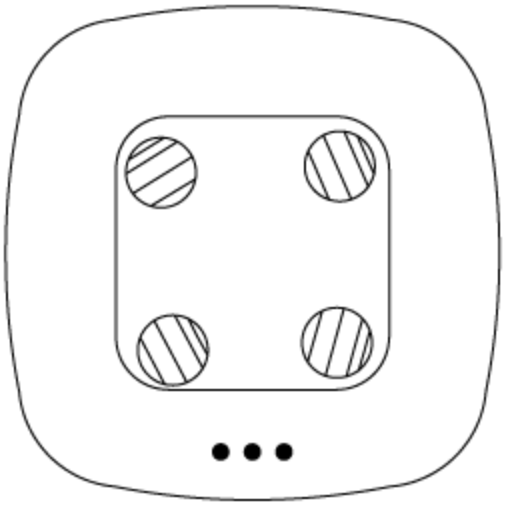

ZUMLINK-US-QUATTRO-DLS and ZUMLINK-US-QUATTRO-DLS-RLY

- 18-24VDC/VAC (25 mA)
- Control Output: 1A @ 30VAC/VDC
- RLY HVAC dry contacts: 1A @ 30VAC/VDC
- Ultrasonic (US) 40 kHz
- Presence maximum: 20 x 20 ft (400 sq ft),
- Minimum: 6.5 x 6.5 ft (42.25 sq ft)
- Radial and tangential maximum: Up to 32 x 32 ft (1000 sq ft)
- Closed-loop daylight sensor: 10-1,000 lux (1-100 fc)

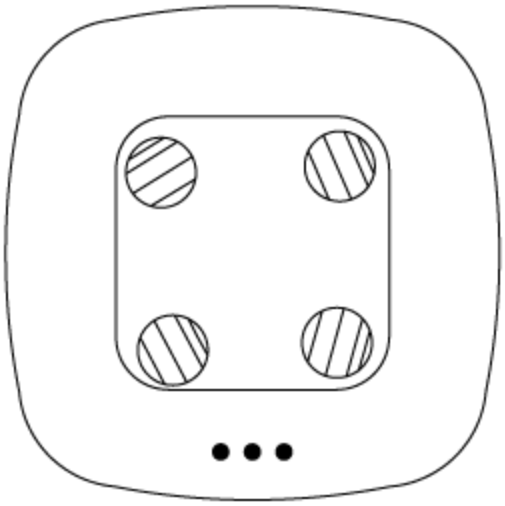

ZUMLINK-US-ONEWAY-DLS and ZUMLINK-US-ONEWAY-DLS-RLY

- 18-24VDC/VAC (25 mA)
- Control Output: 1A @ 30VAC/VDC
- RLY HVAC dry contacts: 1A @ 30VAC/VDC
- Ultrasonic (US) 40 kHz
- Maximum: 6.5 x 33 ft (214.5 sq ft);
- Minimum: 6.5 x 10 ft (65 sq ft)
- Closed-loop daylight Sensor: 10-1,000 lux (1-100 fc)

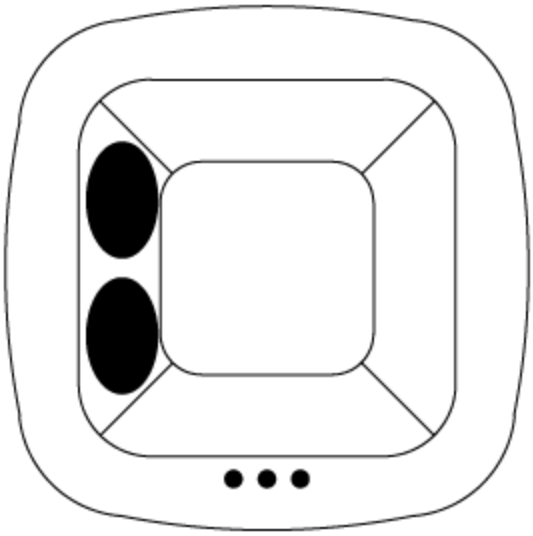

ZUMLINK-US-HALLWAY-DLS and ZUMLINK-US-HALLWAY-DLS-RLY

- 18-24VDC/VAC (25 mA)
- Control Output: 1A @ 30VAC/VDC
- RLY HVAC dry contacts: 1A @ 30VAC/VDC
- Ultrasonic (US) 40 kHz
- Maximum: 6.5 x 65 ft (422.5 sq ft);
- Minimum: 6.5 x 20 ft (130 sq ft)
- Closed-loop daylight sensor: 10-1,000 lux (1-100 fc)

Non-system Standalone Wallbox Controllers

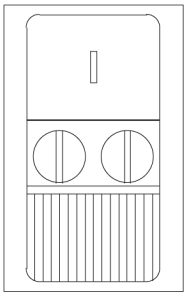

GLA-DT-WLS-1
- Single button ON/OFF
- 120/230/277VAC, 50/60 HZ
- Passive Infrared (PIR) and Ultrasonic (US) 40 kHz
- Occupancy or vacancy modes

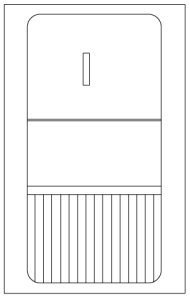

GLA-IR-WLS-1
- Single button ON/OFF
- 120/230/277VAC, 50/60 HZ
- Passive Infrared (PIR)
- Occupancy or vacancy modes

ZUML Hub Kits

Below are illustrations for the Zūm networking and integration.

- 4 available PoE ports
- Support up to 1,000 Zūm spaces when utilizing distribution hubs and gateways
- Provides dynamic scheduling

ZUML-HUB4-PAK

Main power: 120VAC

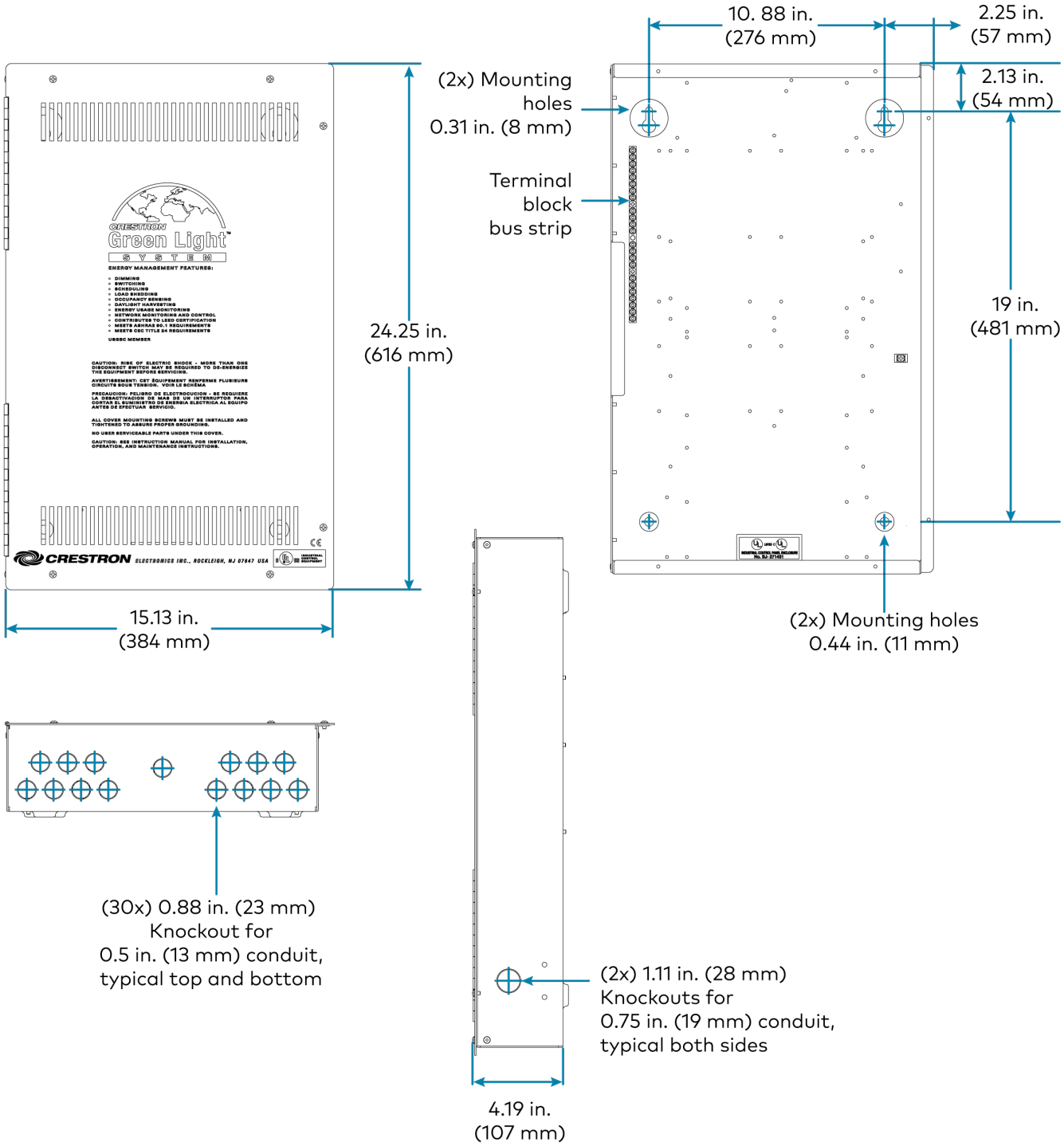

ZUML-HUB4-SWPOE-26

Main power: 100–240VAC

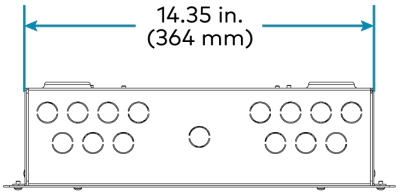

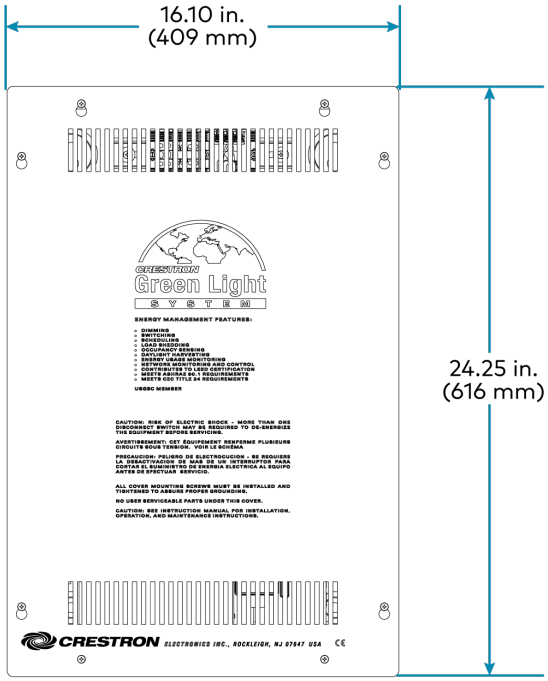

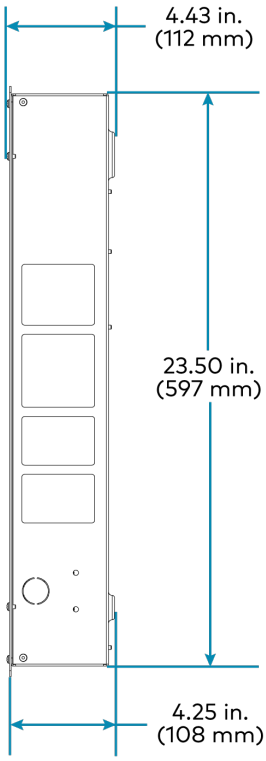

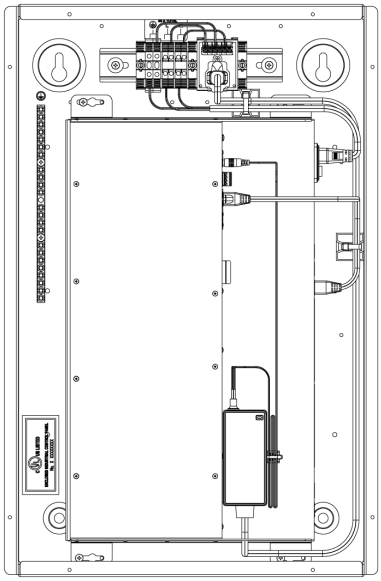

ZUML-SWPOE-26

Main power: 100–240VAC

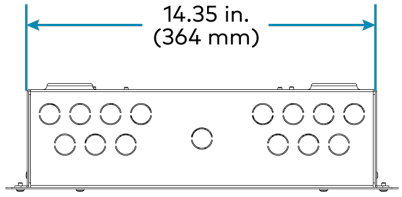

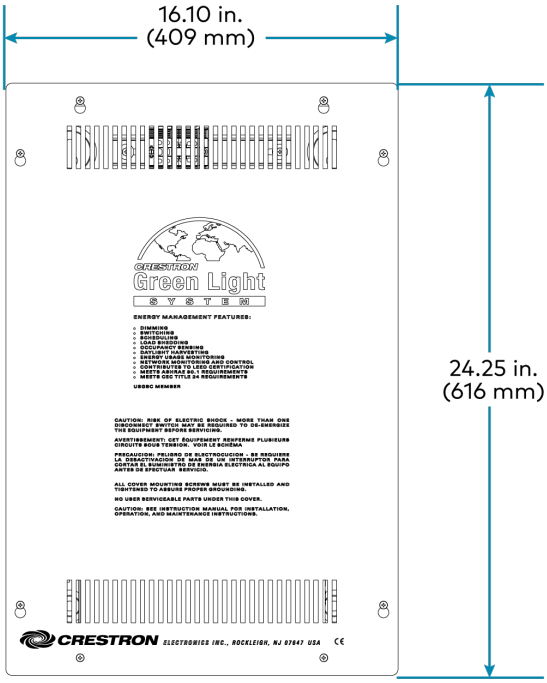

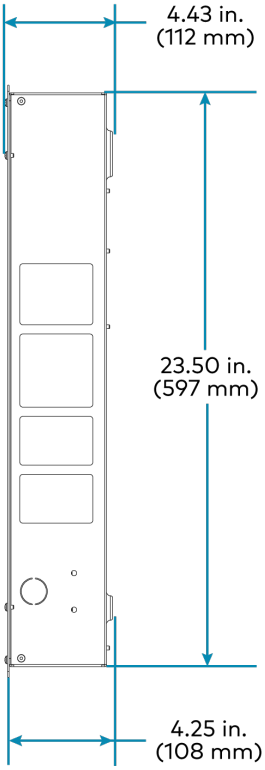

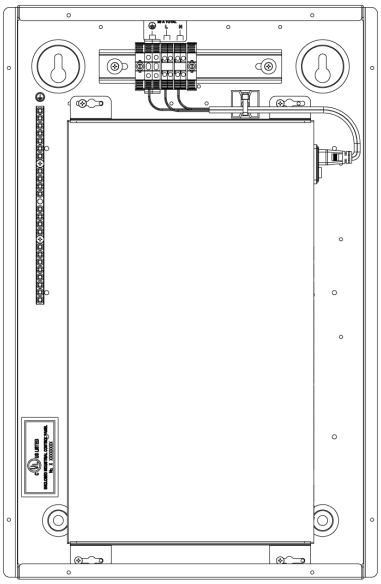

Power Supply

Below are illustrations for the Zūm wired power supply. Refer to Power Supply Installation on page 138 for details.

ZUMLINK-JBOX-PSU

(4) Zūm Link ports (250mA Zūm Link power total per side)

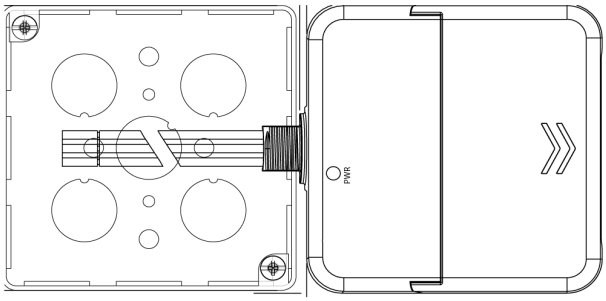

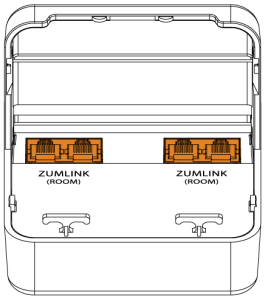

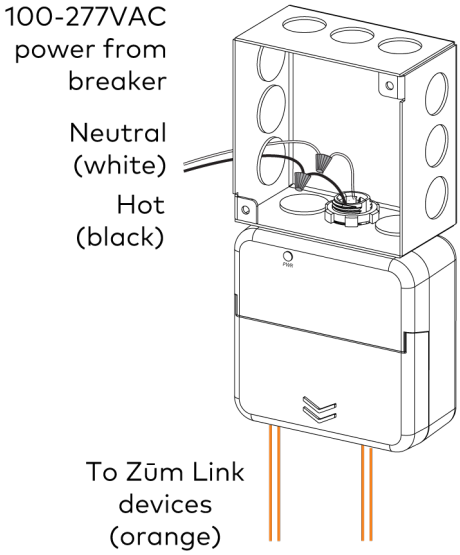

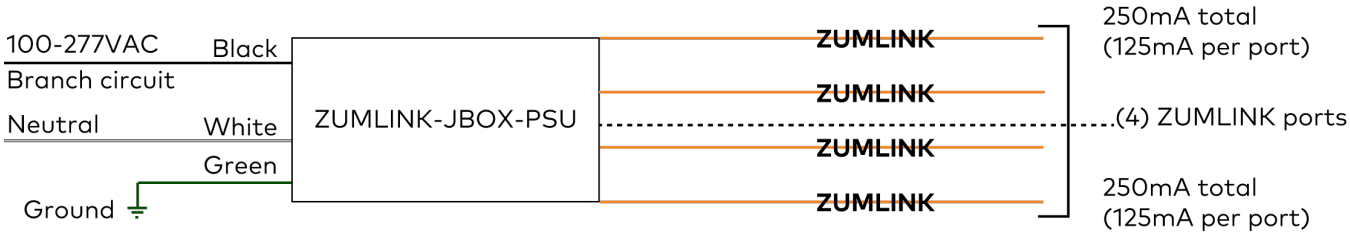

PoE Switch

Below are illustrations for the Zūm wired PoE switch.

CEN-SWPOE-5AC

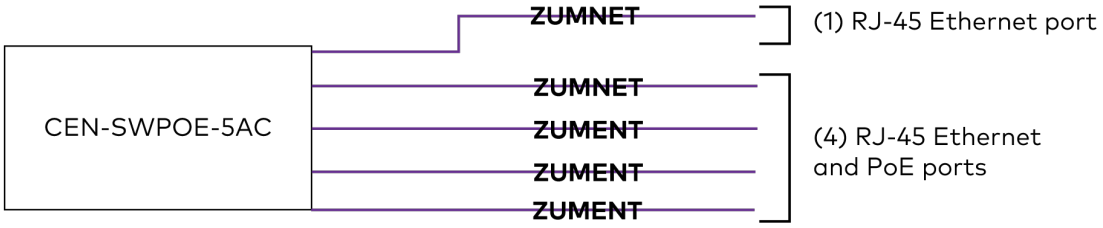

Cables

CBL-CAT5E-ZUMNET-P

- Preterminated CAT5E
- RS485
- Plenum rated
- Substitution option: CAT5E to CAT7 cable is compatible with the T865B configuration

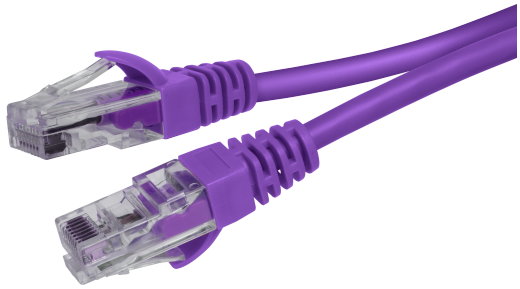

CBL-CAT5E-ZUMLINK-P

- Preterminated CAT5E
- RS485
- Plenum rated
- Substitution option: CAT5E to CAT7 cable is compatible with the T865B configuration

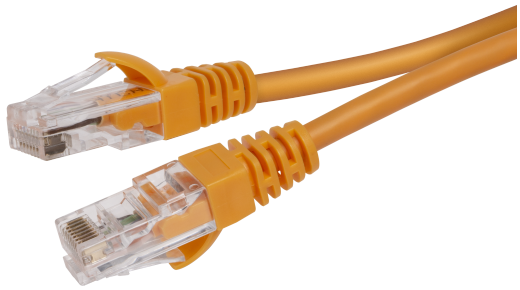

For Nonsystem Sensors

- 18 AWG recommended
- Solid core
- Stripped to 0.25 in. - 0.375 in. (6 mm - 9 mm)

Terminations

Zūm Net Load Controller

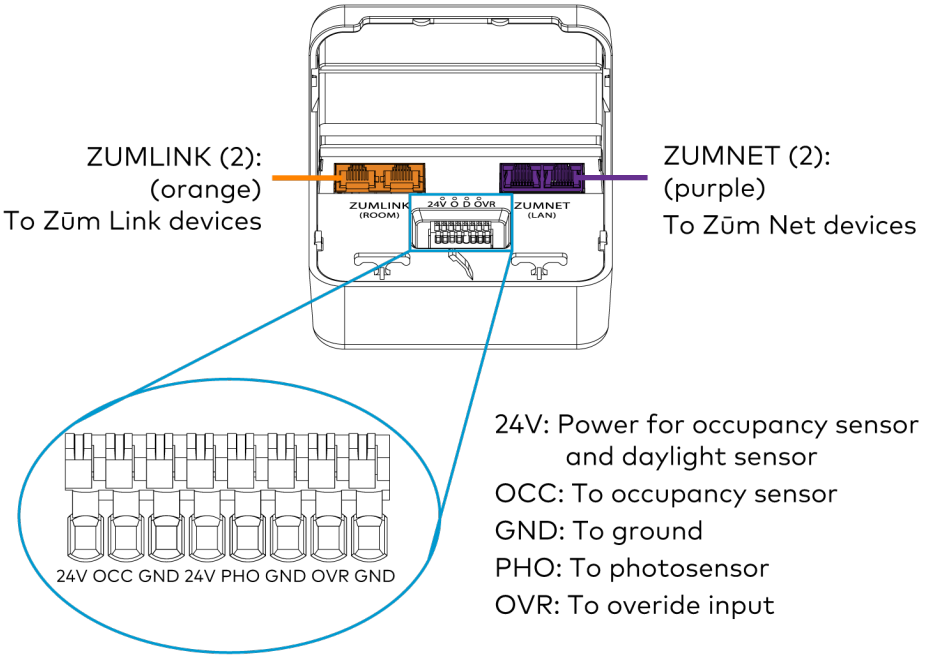

Zūm Net Load Controller to Keypad

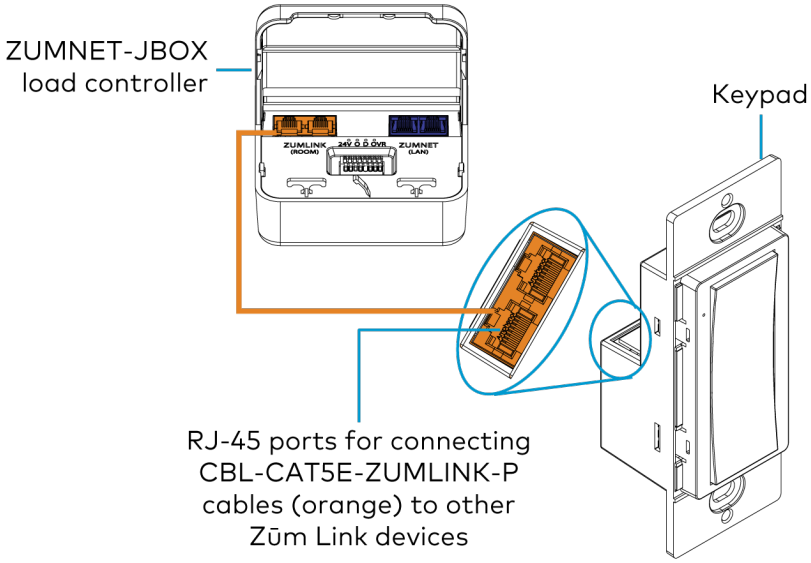

Zūm Net Load Controller to Presence Detector

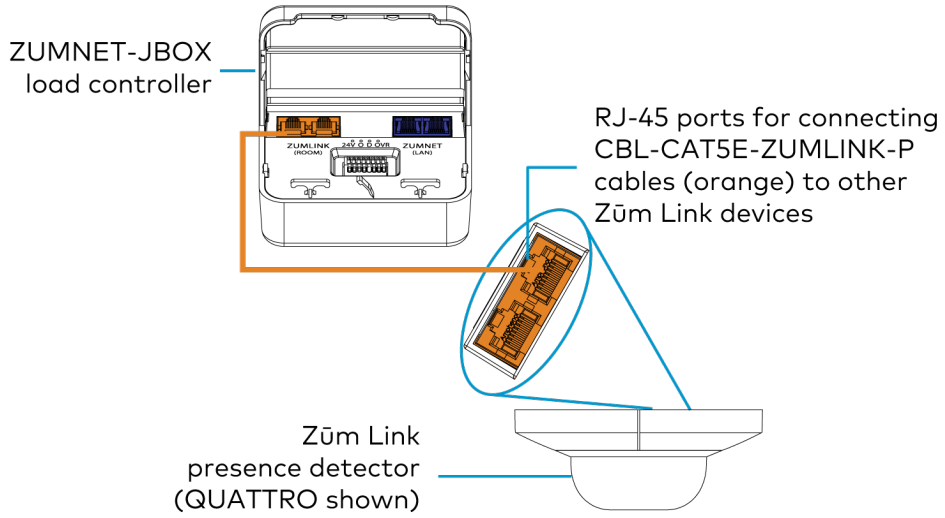

Zūm Net Load Controller to Nonsystem Analog Sensor

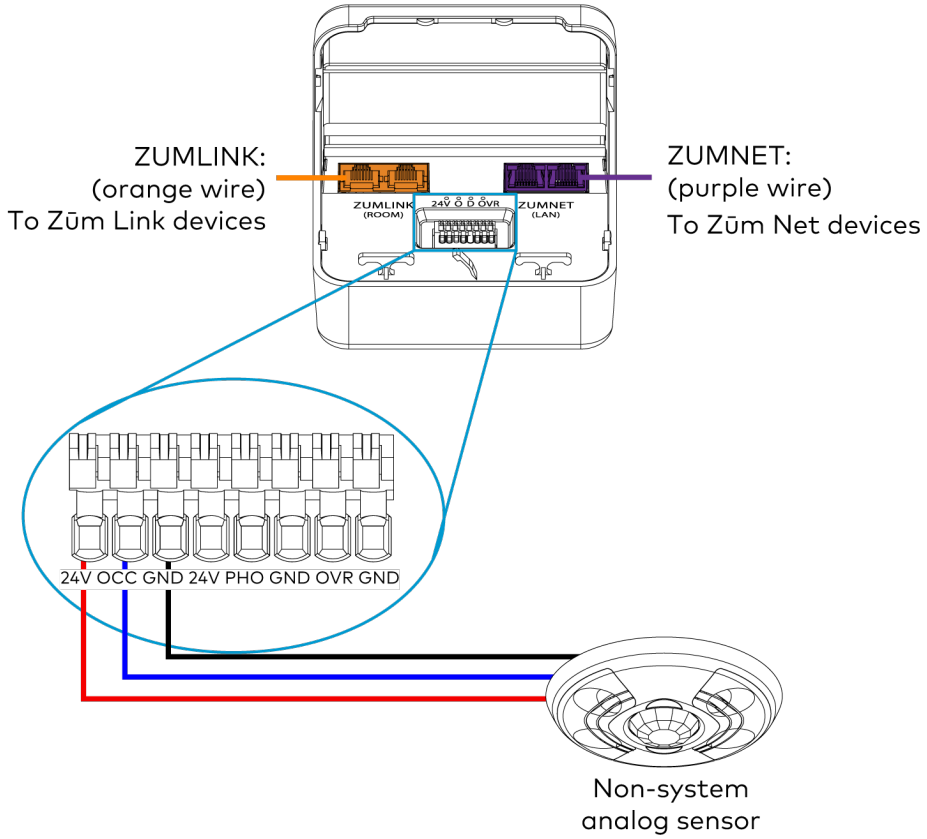

Zūm Wired System Diagram

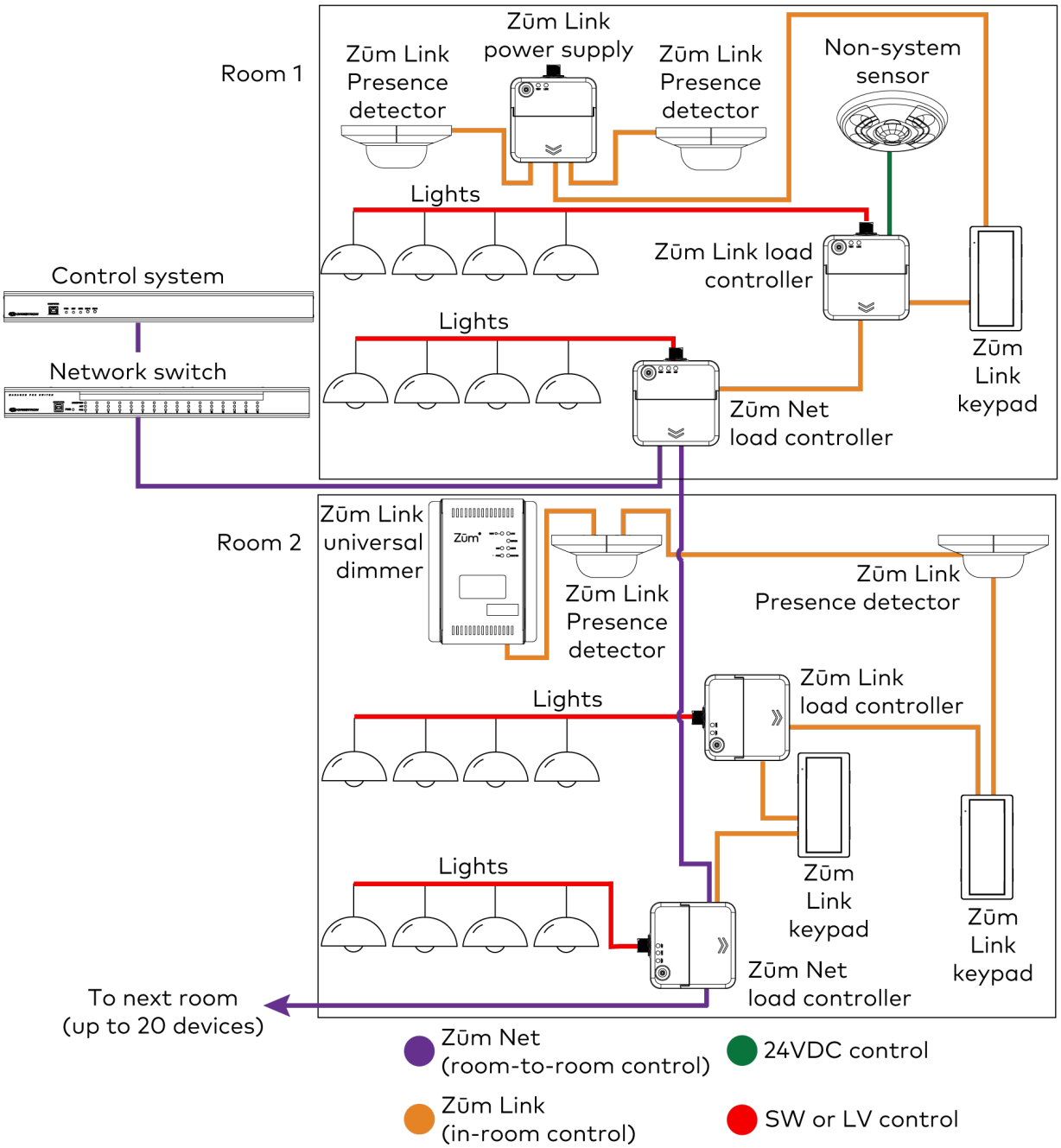

NOTES:

- Daisy-chain up to 20 Zūm Net devices (up to 328 ft (100 m) between Zūm Net devices) with purple CBL-CAT5E-ZUMNET-P RJ-45 cables (sold separately).
- Do not exceed three network switches between a ZUM-HUB4 and a Zūm Net device.
- System sensors communicate digitally via Zūm Link. Non-system sensors communicate via an analog connection on a Zūm Wired load controller.

Build a Space

- Requires one Zūm Net device per space

  Multiple Zūm Net devices can be used in the space but only one Zūm Net device will be the primary room controller.
- 32 Zūm Wired devices per space
  - Maximum of 32 zones or DALI groups
  - Maximum of 16 keypads
  - Maximum of 4 daylight inputs
- Each load controller outputs 85 mA Zūm Link power
  - Stack up to 8 load controllers
  - Maximum mA cumulative draw of 750 mA (0.75A)
  - Power supply provides 2 x 125 mA outputs per segment (2 segments, 250 mA per segment)
- Each load controller outputs 85 mA of analog sensor power
  - Power does NOT stack
  - Maximum of 8 occupancy sensors per load controller input
  - Additional power by Steinel power pack GLA-TR-100 (sold separately)
- Distance limitations:
  - 500 ft from Zūm Net to Zūm Link device
  - 500 ft from Zūm Link to Zūm Link device
  - 1,000 ft cumulative per run

Network a System

- Requires one Zūm Net load controller per space is required to network the system.
- Up to 1,000 Zūm Net devices per Hub

  Nine BACnet objects maximum per space
- Daisy chain up to 20 Zūm Net load controllers on a single cable run
- Distance limitations for Zūm Net devices:
  - 328 ft from hub to Zūm Net device
  - 328 ft between Zūm Net devices
  - 6,560 ft cumulative per run
- Distance limitations for Zūm Link devices:
  - 500 ft from Zūm Net device to Zūm Link device
  - 500 ft between Zūm Link devices
  - 1,000 ft cumulative per run
- Three network switch limit between Hub and Zūm Net device

Best Practices

- Do **NOT** connect standard Ethernet ports on network-based devices to the orange Zūm Link ports on Zūm Link or Zūm Net devices. Also, do **NOT** connect the purple Zūm Net ports on Zūm Net devices to the orange Zūm Link ports on Zūm Link devices. These connections may damage network devices.

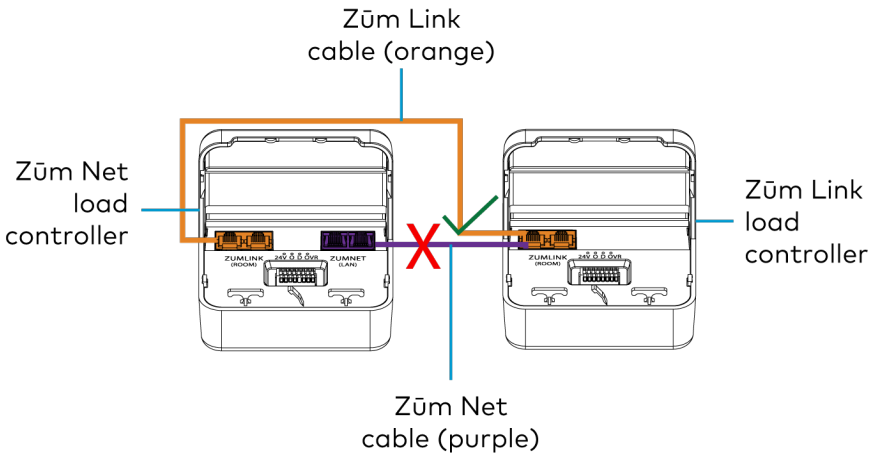

- Only use preterminated, color-coded Crestron cables.
  - CBL-CAT5E-ZUMNET-P

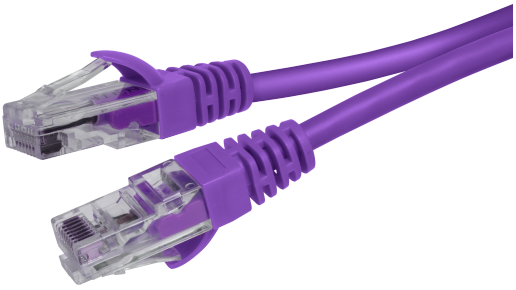

  - CBL-CAT5E-ZUMLINK-P

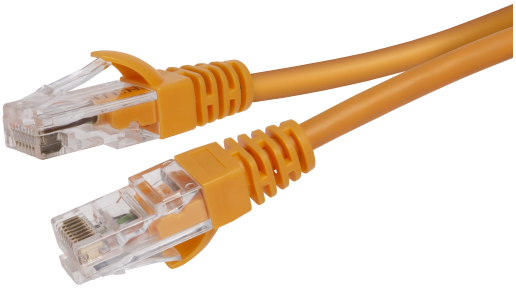

- Use cable lengths that allow for appropriate service loops at the end of cable runs.

- Terminate all Ethernet cables according to T568B.

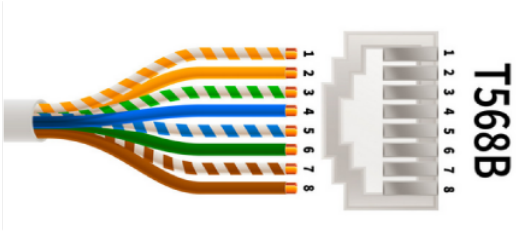

- Use appropriate hooks and mounting practices for Ethernet cabling.

- Run Crestron cables at 90° to all high voltage cables.

Typical Zūm Wired Applications

Below are diagrams for typical Zūm wired applications.

Wiring Key

ZUMLINK	CBL-CAT5E-ZUMLINK-P or CAT5E equivalent
ZUMNET	CBL-CAT5E-ZUMNET-P or CAT5E equivalent
SENSORS	CRESNET or equivalent (1) Pair 18AWG (1) Twisted pair 22AWG
OVERRIDE	(1) Twisted pair 18AWG (1) Shield

ZUMNET-JBOX-16A-LV

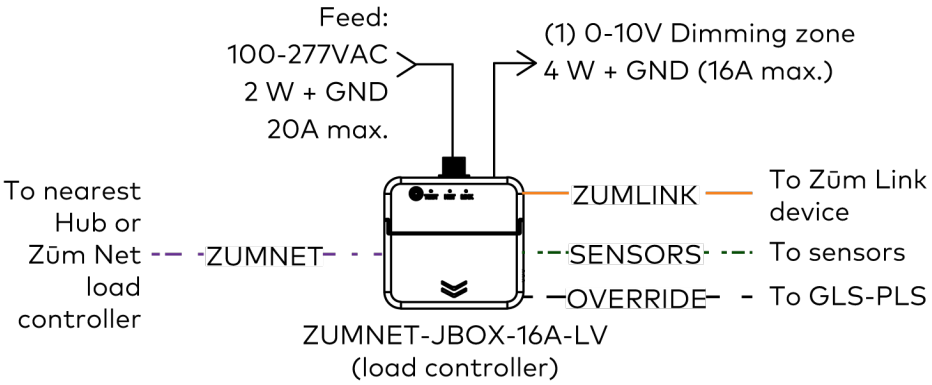

ZUMNET-JBOX-DALI

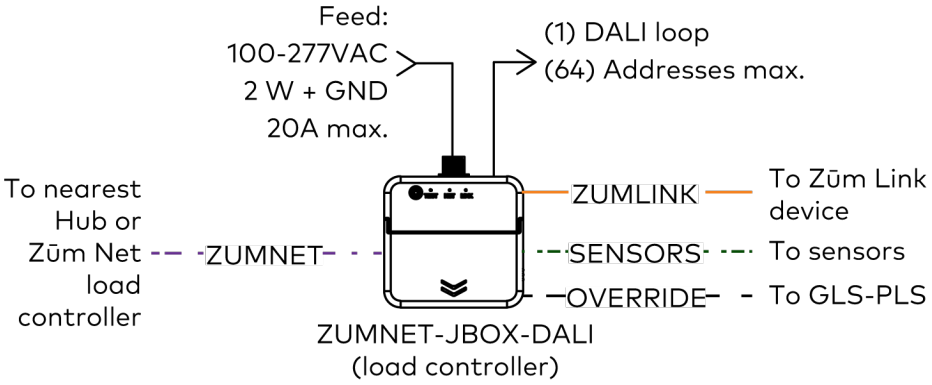

ZUMLINK-JBOX-16A-LV

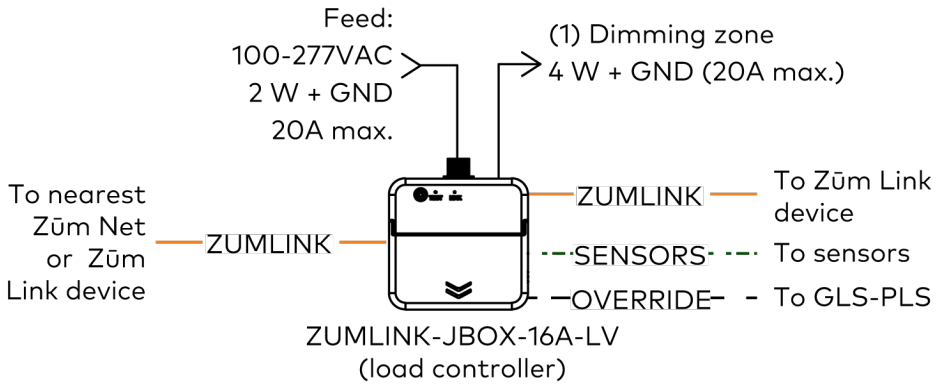

ZUMLINK-JBOX-20A-SW

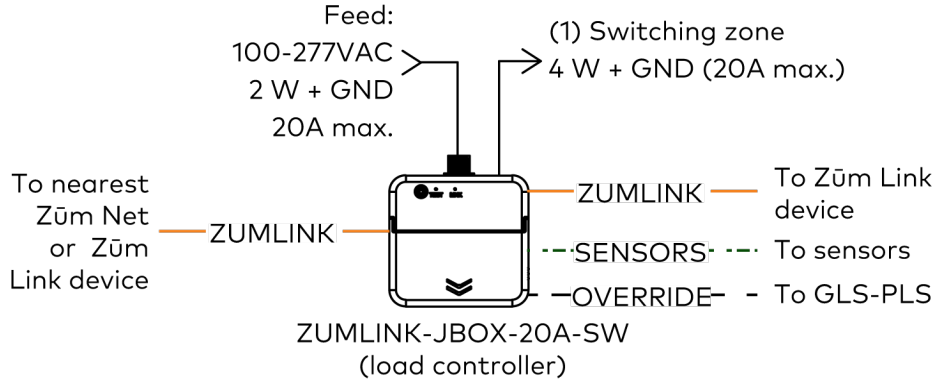

ZUMLINK-JBOX-20A-PLUG

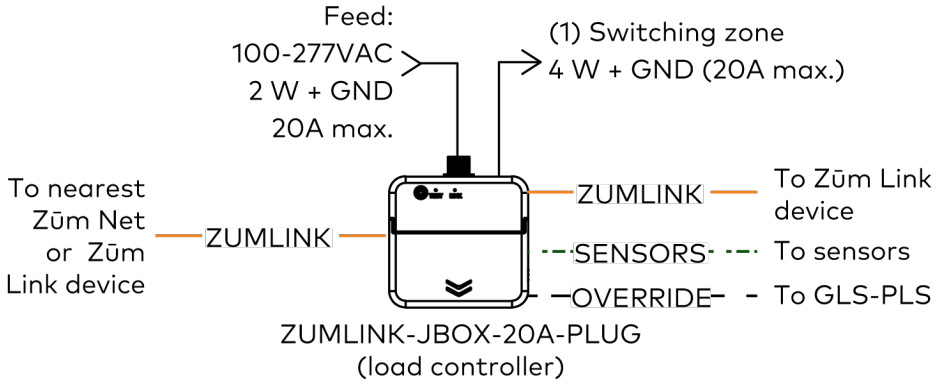

ZUMLINK-EXP-16A-DIMU

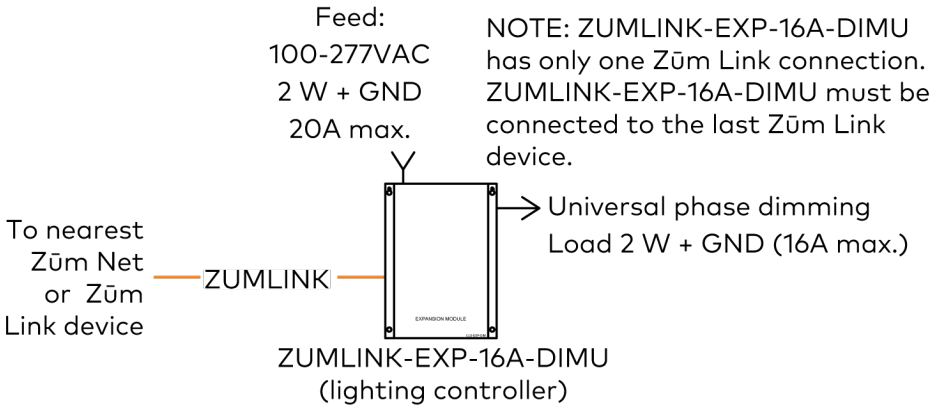

ZUMLINK-KP

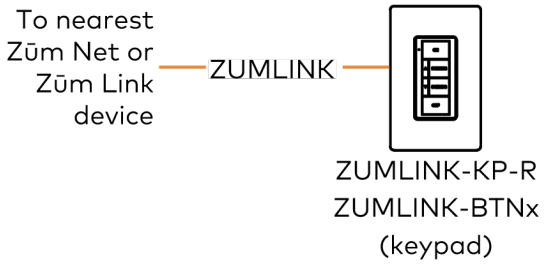

Presence Detectors

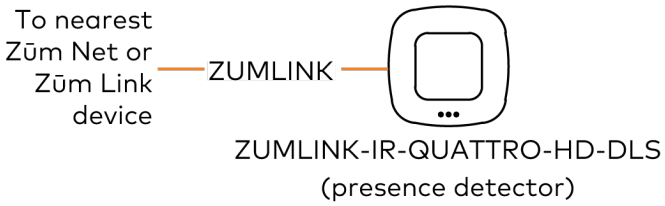

ZUMLINK-JBOX-PSU

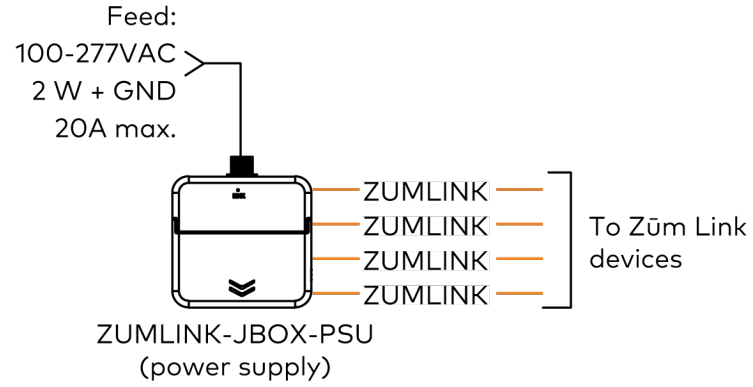

CEN-SWPOE-5AC

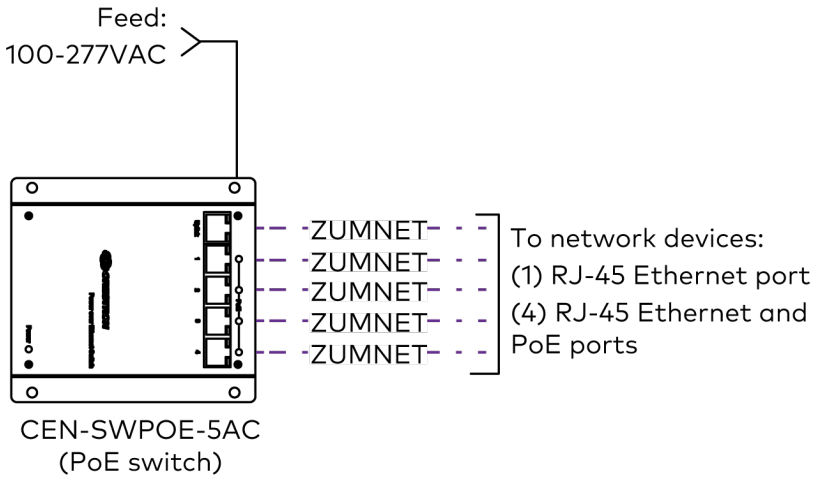

Do not excede 328 ft from control processor to Zūm Net device or between Zūm Net devices

Do not excede 20 Zūm Net daisy-chained devices on each Zūm Net run

Emergency Override

Feeds:
120V/208 or 277/480 VAC from breaker panel
(overcurrent protection by installer)
3PH 4 W normal power

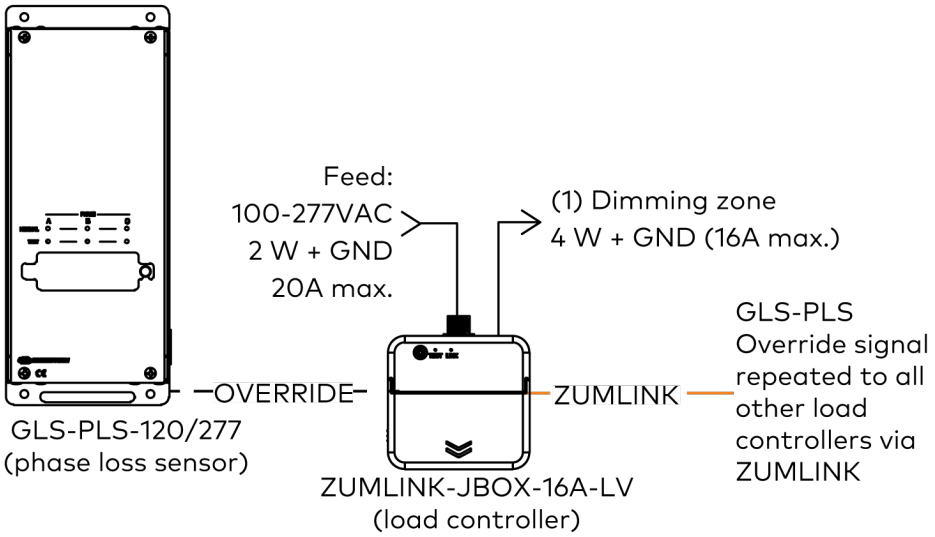

Connect the GLS-PLS to the first Zūm Net or Zūm Link load controller OVR terminal. The Override signal is then carried to all other load controllers via ZUMLINK communication. During power loss, the Override signal passes through any powerless/normal load controllers to trigger them to enter emergency mode.

Standalone Space

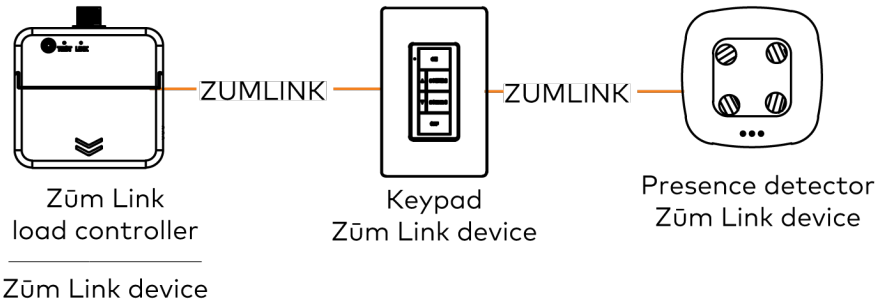

Expandable up to 32 Zūm Link devices
500 ft maximum between AC powered Zūm Link devices

Networked Space, Multiple Rooms

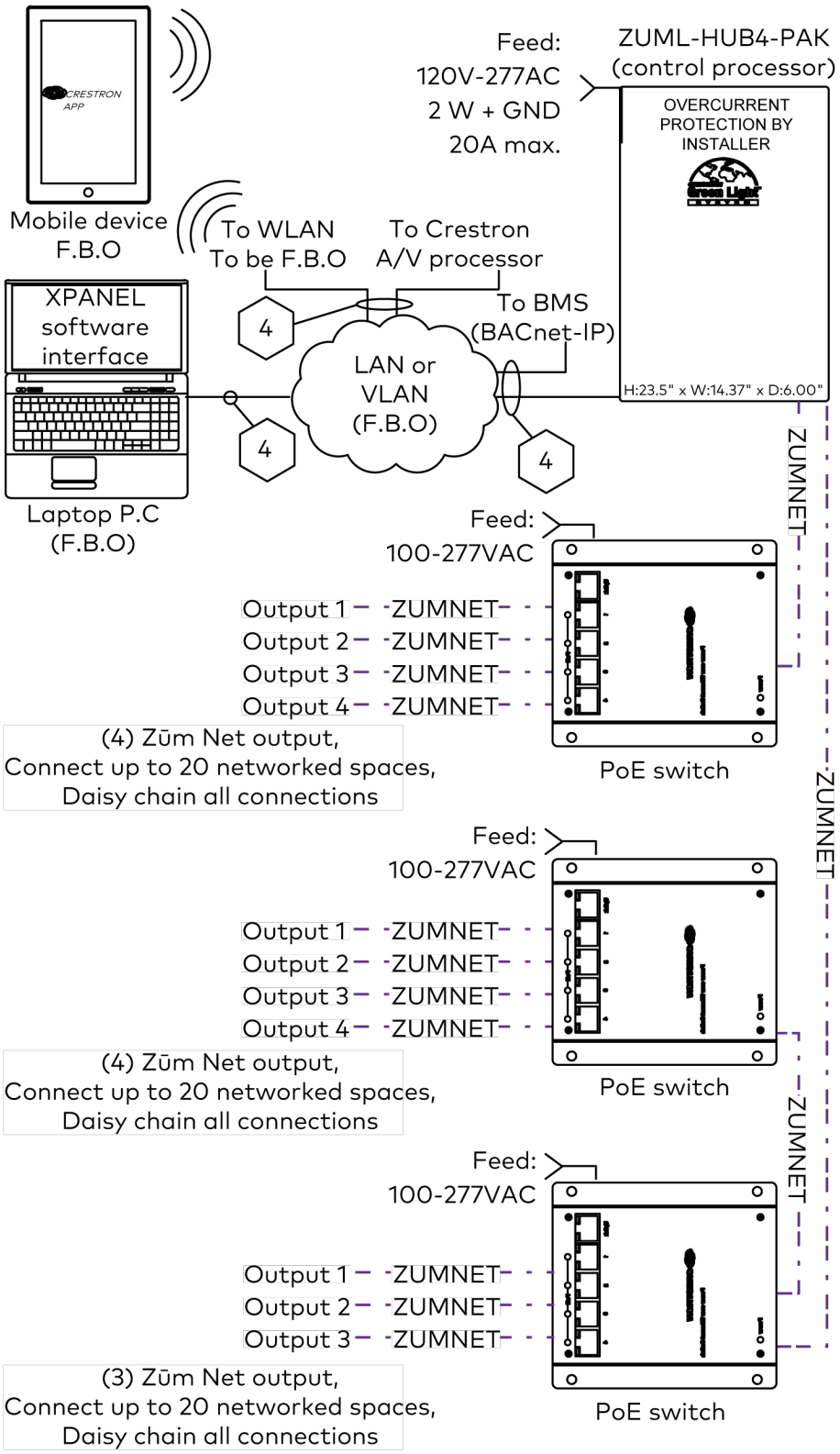

Networked Space, Small

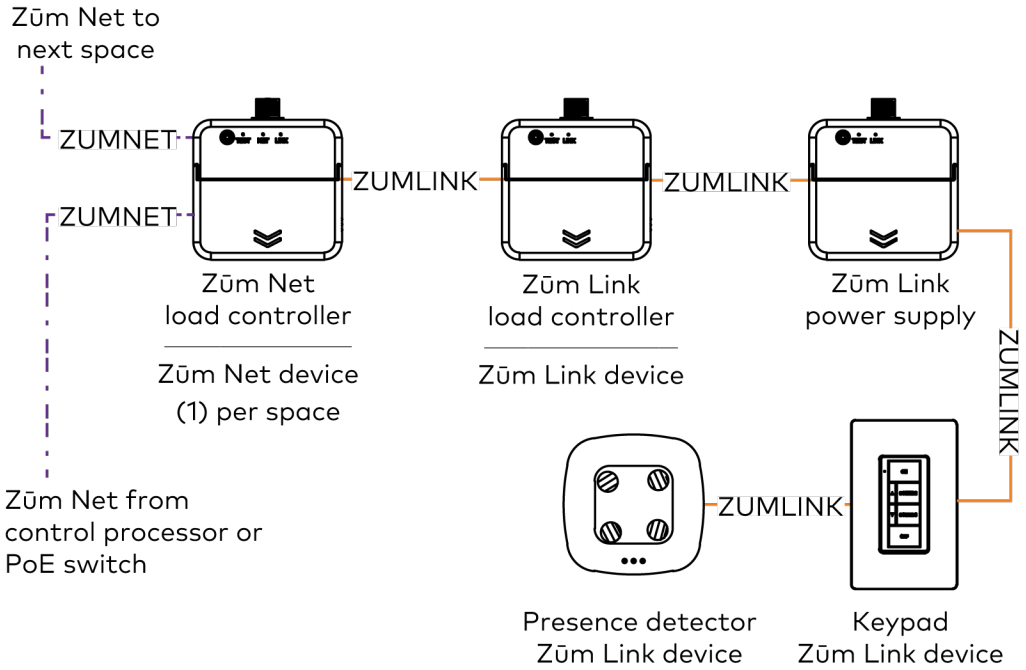

Expandable up to 31 Zūm Link devices

500 ft maximum between AC powered Zūm Link devices

Do not exceed 328 ft from control processor to Zūm Net device or between Zūm Net devices

Do not exceed 20 Zūm Net daisy-chained devices on each Zūm Net run

Networked Space, Large

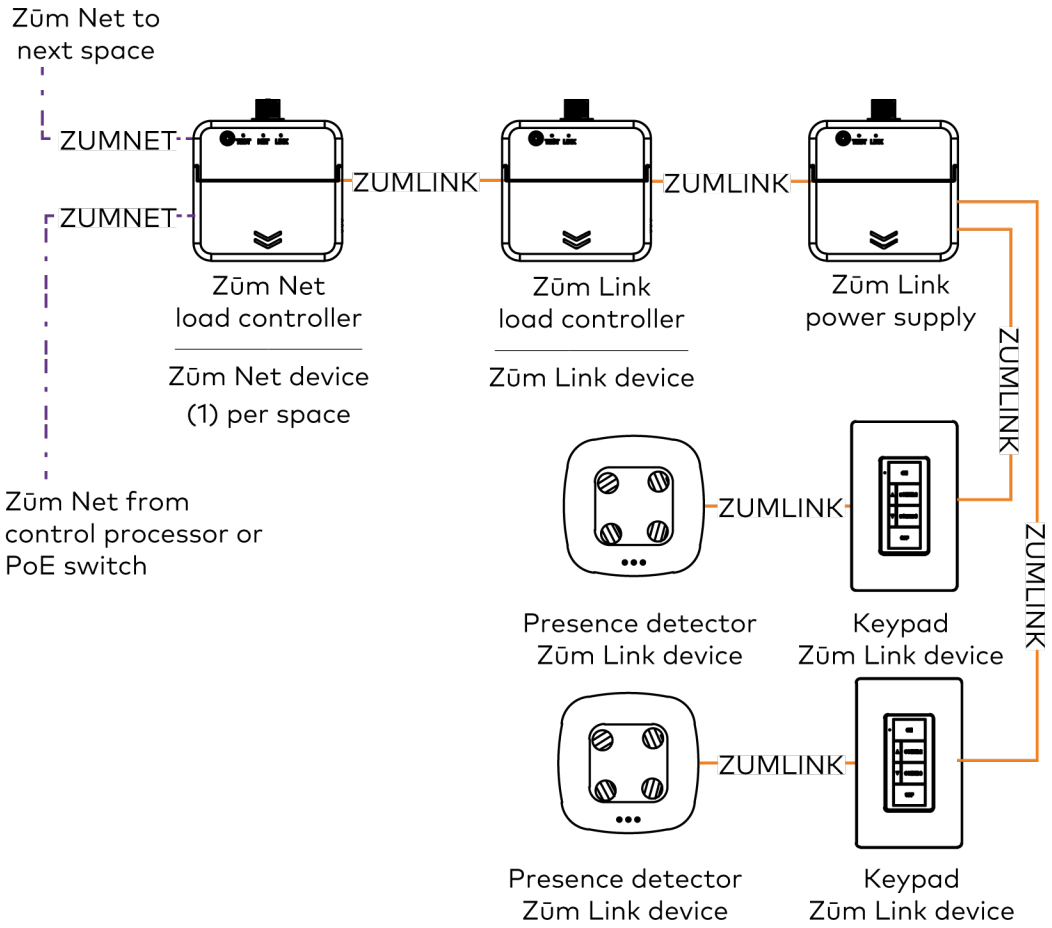

Expandable up to 31 Zūm Link devices

500 ft maximum between AC powered Zūm Link devices
Do not exceed 328 ft from control processor to Zūm Net device or between Zūm Net devices

Do not exceed 20 Zūm Net daisy-chained devices on each Zūm Net run

Daisy Chain Rooms

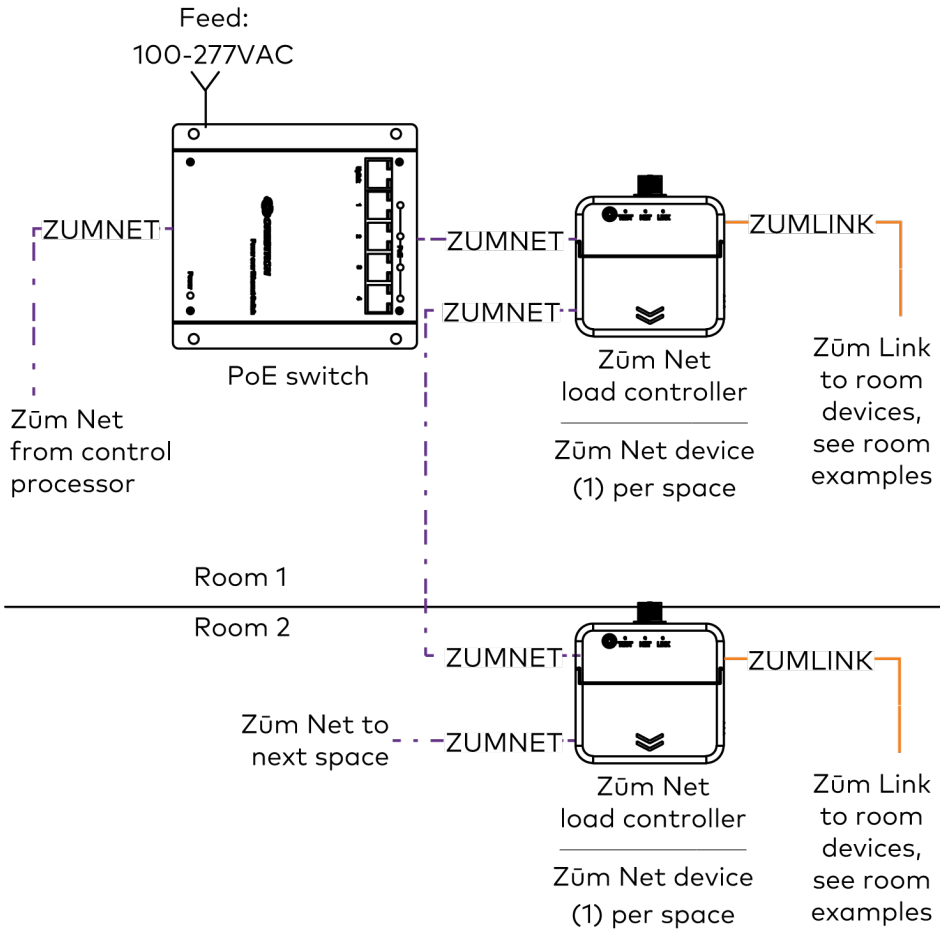

Do not exceed 328 ft from control processor to Zūm Net device or between Zūm Net devices

Do not exceed 20 Zūm Net daisy-chained devices on each Zūm Net run

Daisy Chain CEN-SWPOE-5AC for Multiple Floors

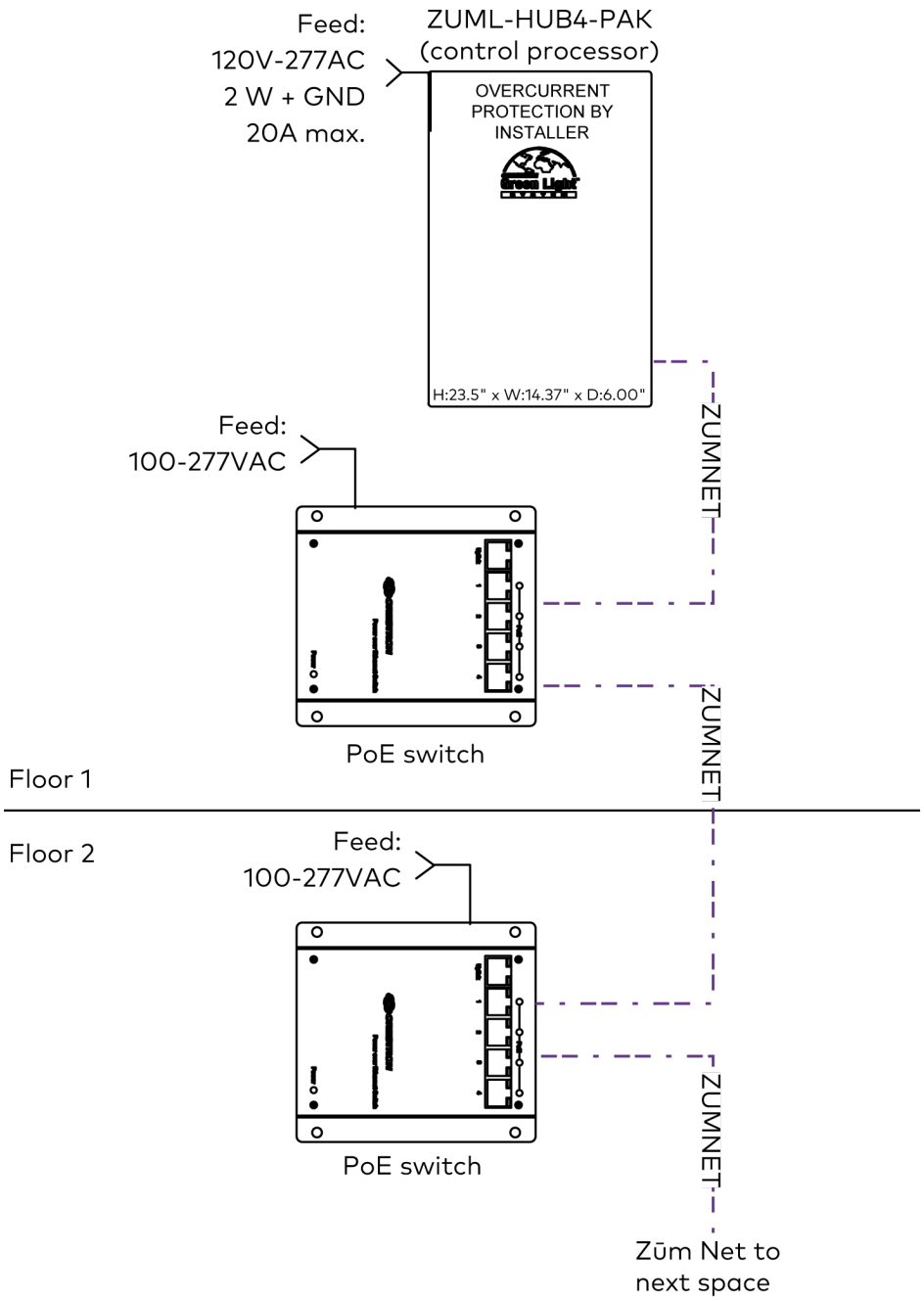

Do not exceed 328 ft from control processor to Zūm Net device or between Zūm Net devices

Do not exceed 20 Zūm Net daisy-chained devices on each Zūm Net run

Wireless Field Guide

The following sections provide best practices for setting up a Zūm Mesh wireless space.

Load Controllers

Below are illustrations for the Zūm wireless load controllers.

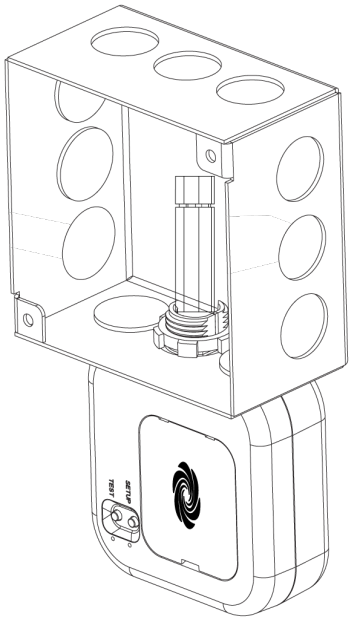

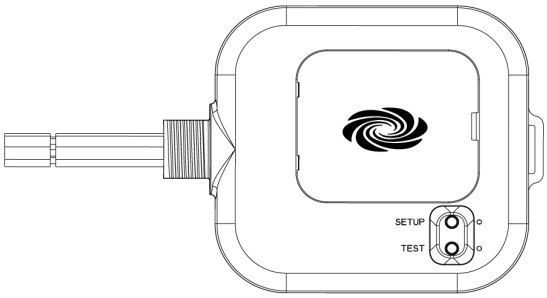

Typical wireless junction box controller

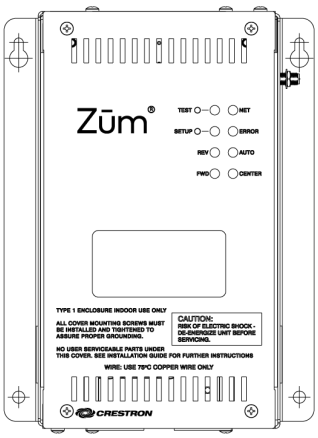

ZUMMESH-EXP-16A-DIMU

ZUMMESH-JBOX-20A-SW

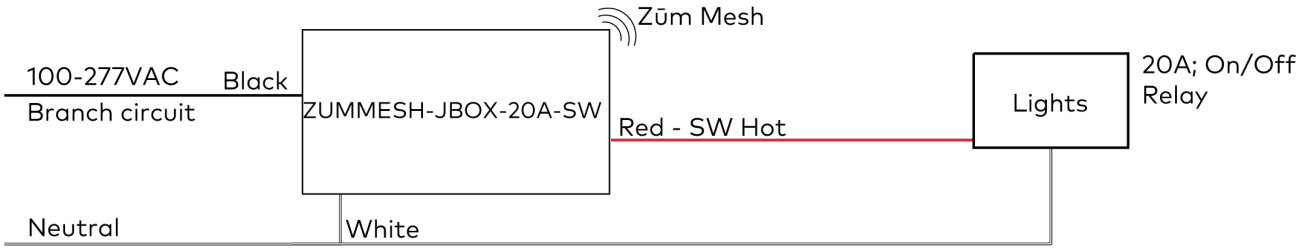

ZUMMESH-JBOX-20A-PLUG

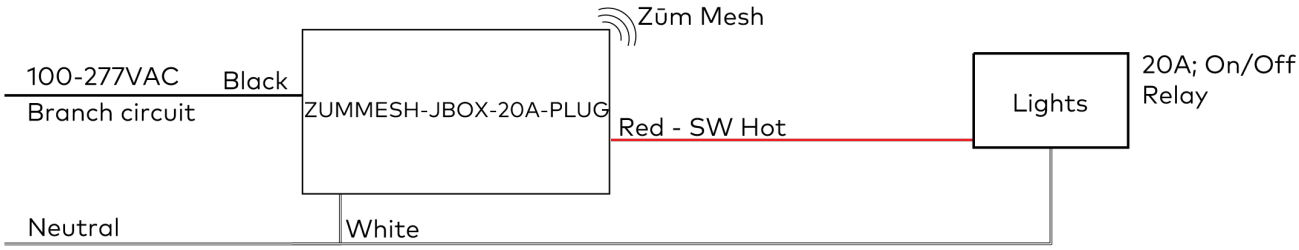

ZUMMESH-JBOX-16A-LV-EM

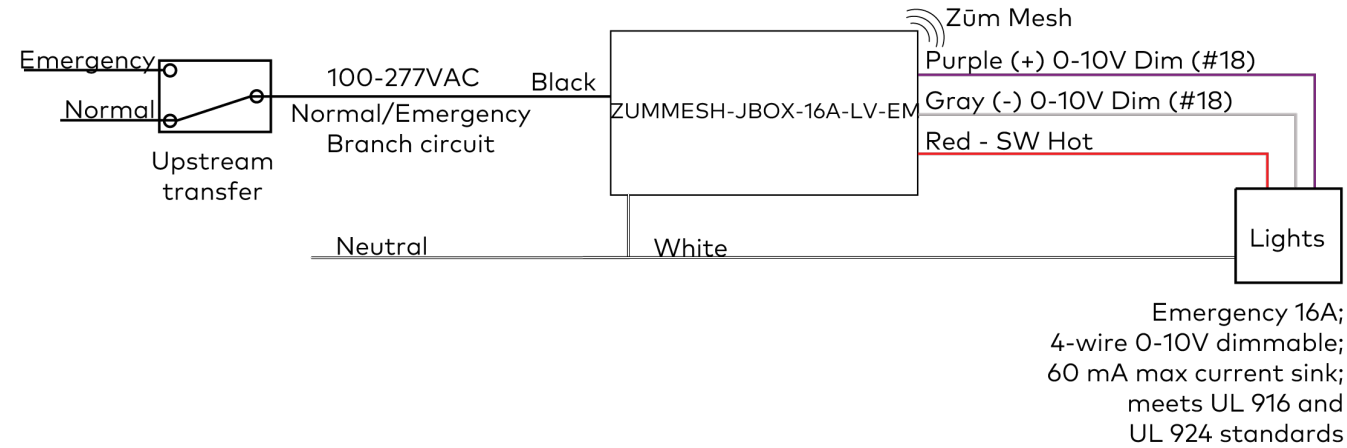

Emergency 16A; 4-wire 0-10V dimmable; 60 mA max current sink; meets UL 916 and UL 924 standards

ZUMMESH-JBOX-16A-LV

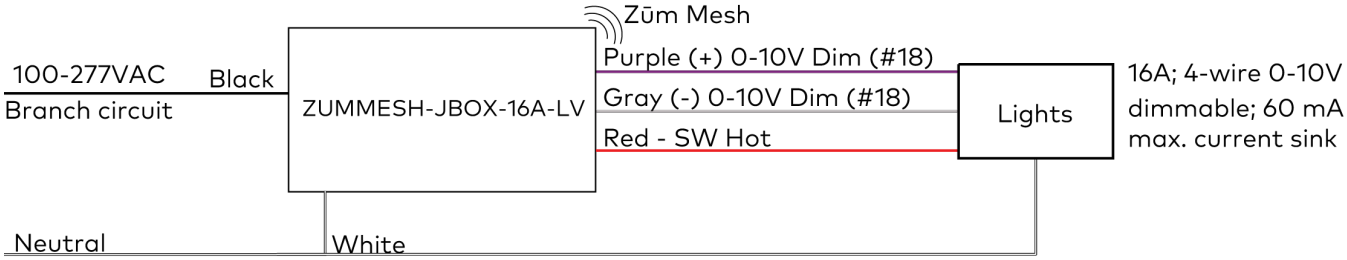

ZUMMESH-JBOX-5A-LV

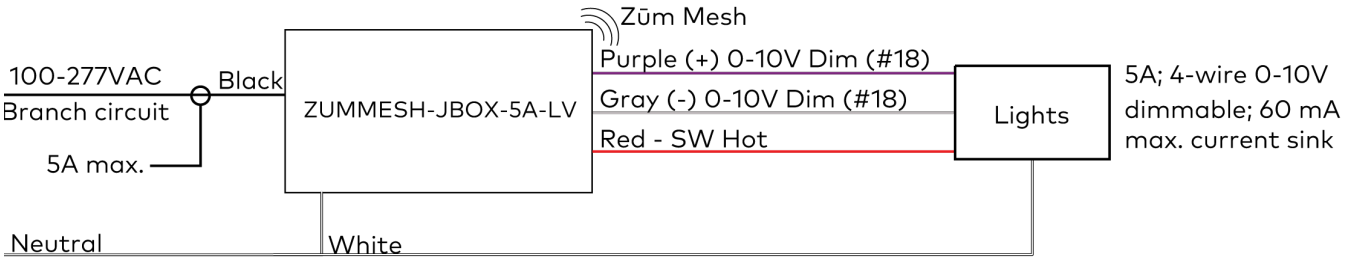

ZUMMESH-JBOX-DALI

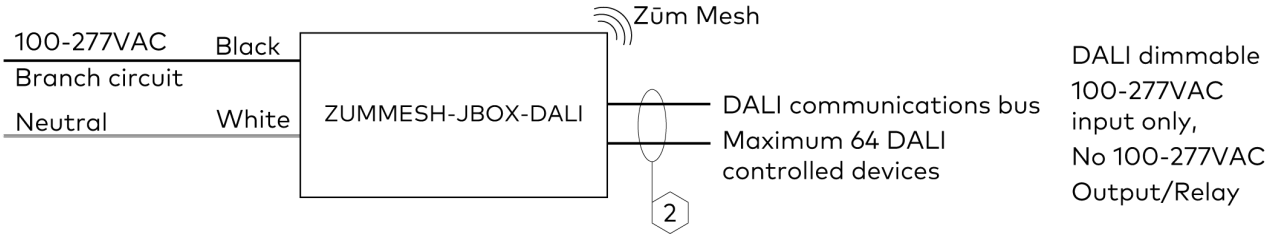

ZUMMESH-EXP-16A-DIMU

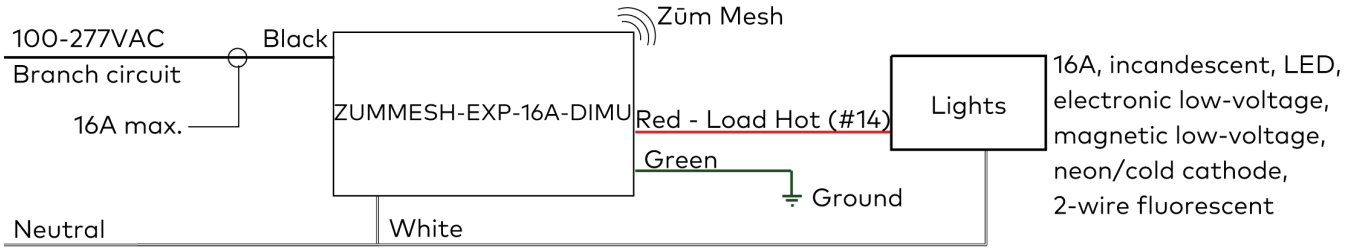

Does not connect to a ZUMMESH-NETBRIDGE.

Wallbox Load Controllers

Below are illustrations for the Zūm wireless wallbox load controllers.

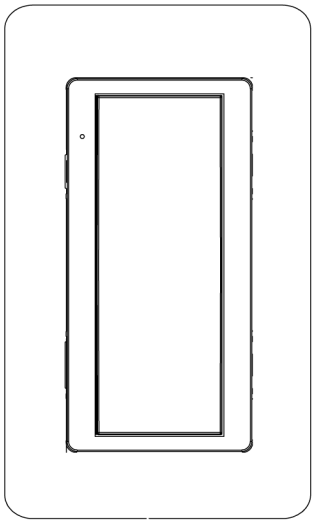

ZUMMESH-DIM/DELV

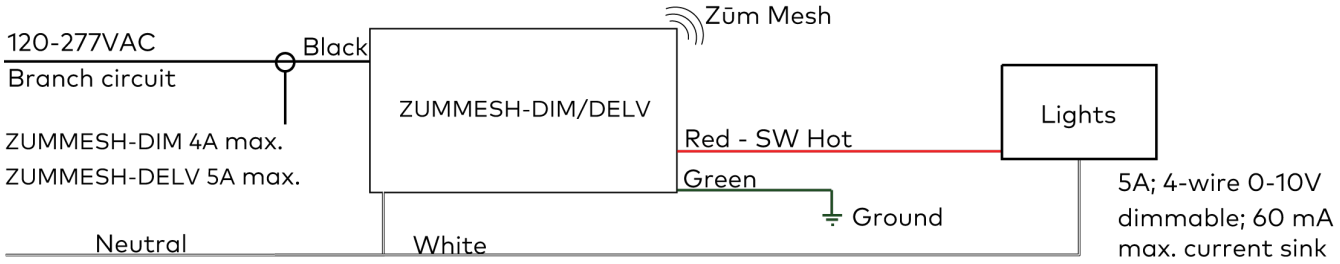

ZUMMESH-5A-SW

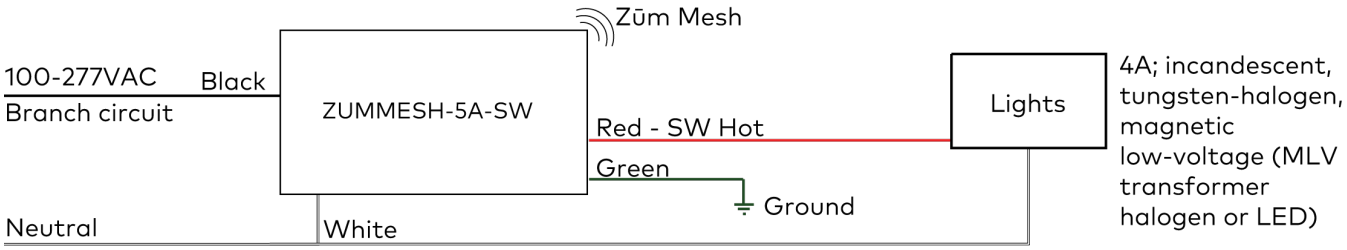

ZUMMESH-5A-LV

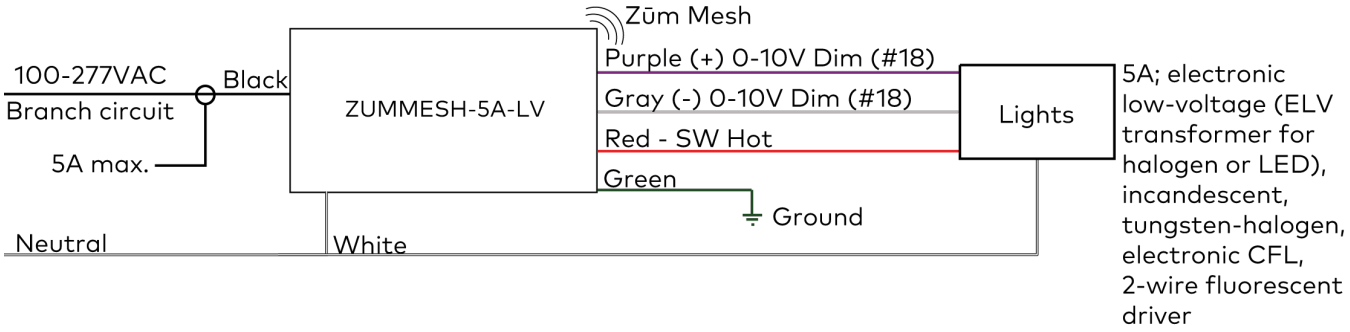

Power Supply

Below are illustrations for the Zūm wireless power supply.

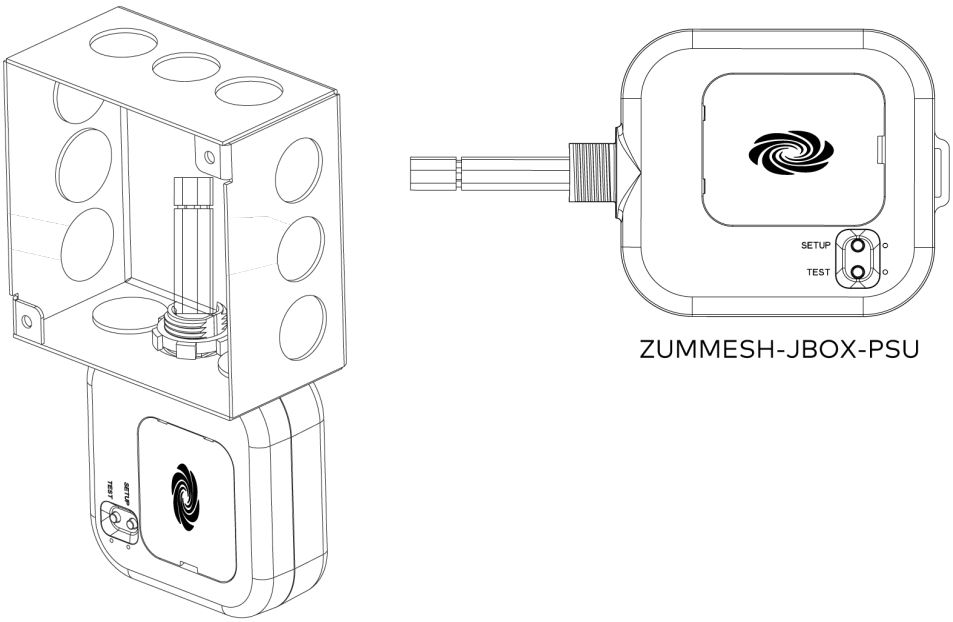

ZUMMESH-JBOX-PSU

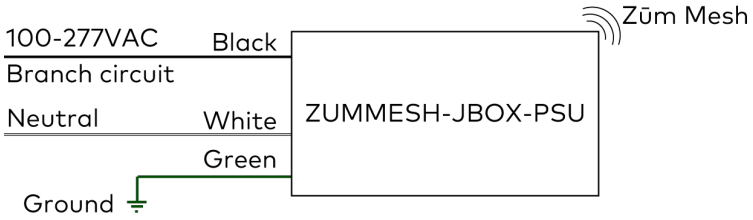

Networking and Integration

Below are illustrations for the Zūm networking and integration.

ZUML Hub Kits

- 4 available PoE ports
- Support up to 28 gateways when utilizing distribution hubs
- Support up to 1,000 Zūm spaces when utilizing distribution hubs and gateways
- Provides dynamic scheduling

ZUML-HUB4-PAK

Main power: 120VAC

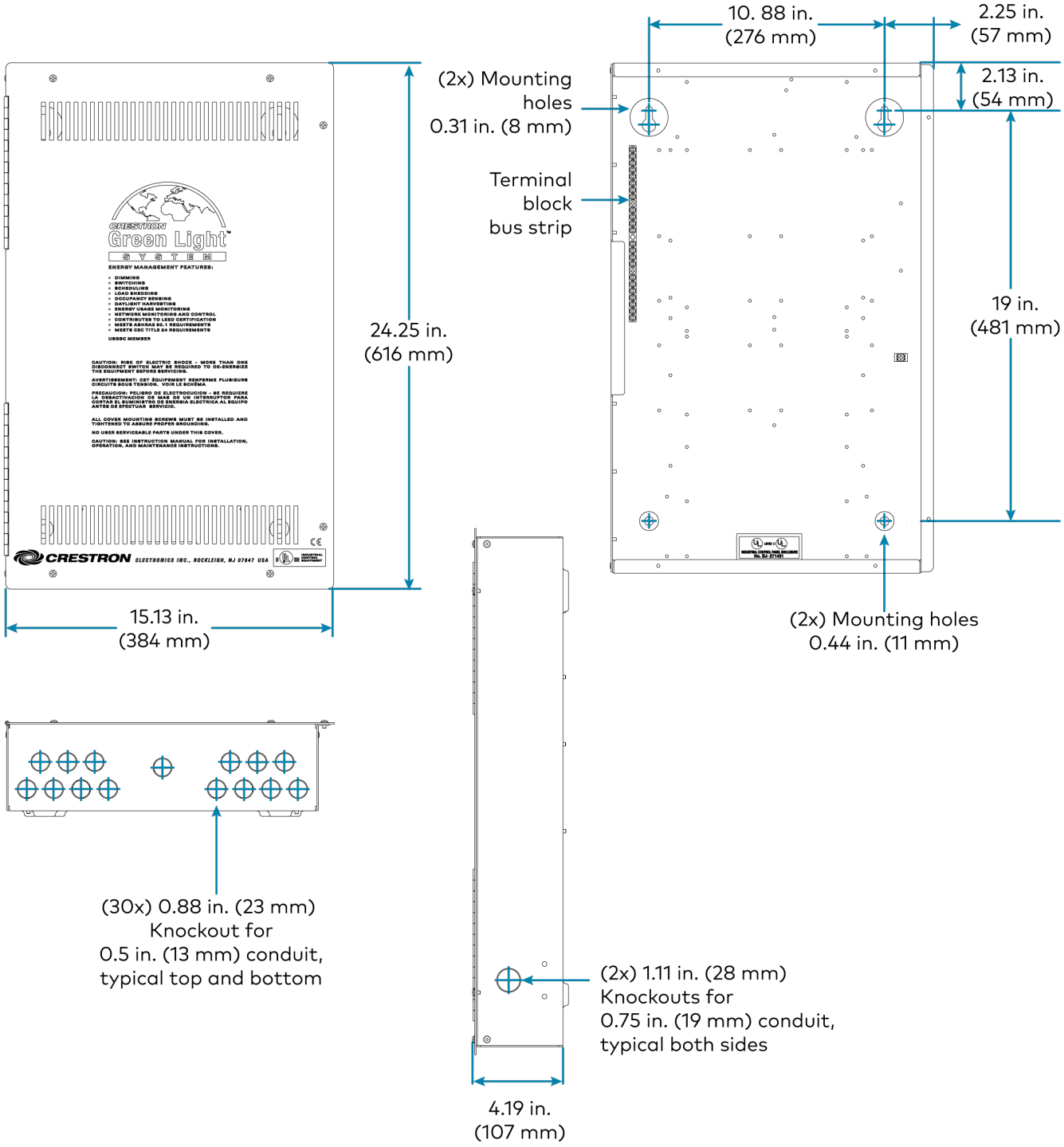

ZUML-HUB4-SWPOE-26

Main power: 100–240VAC

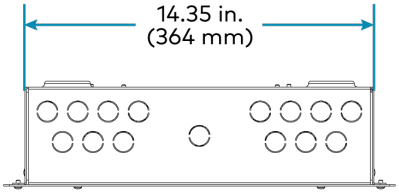

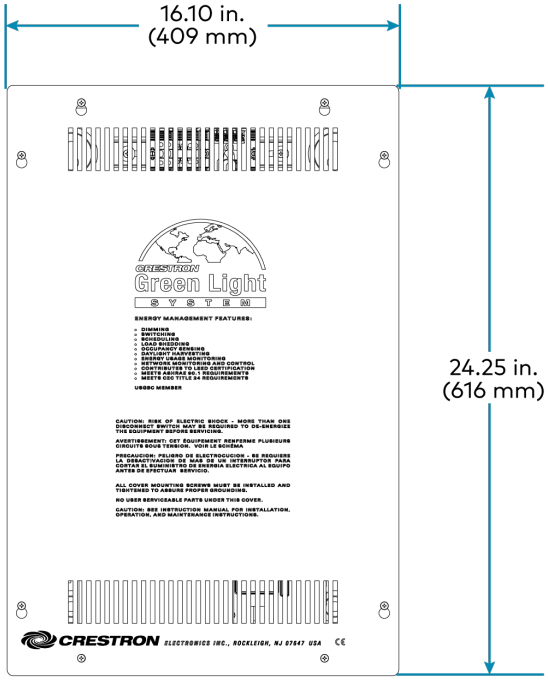

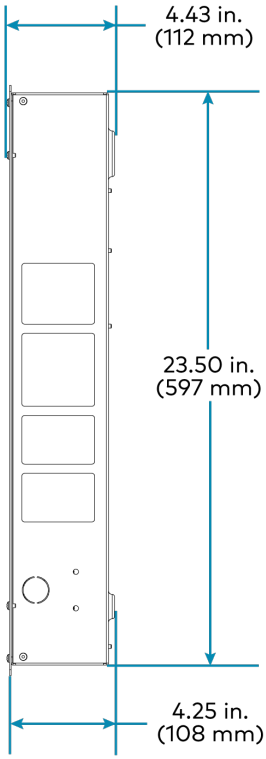

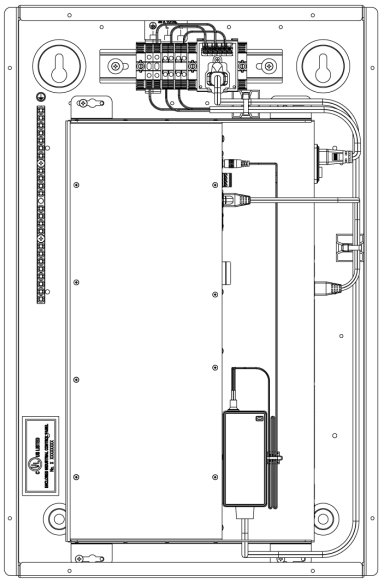

ZUML-SWPOE-26

Main power: 100–240VAC

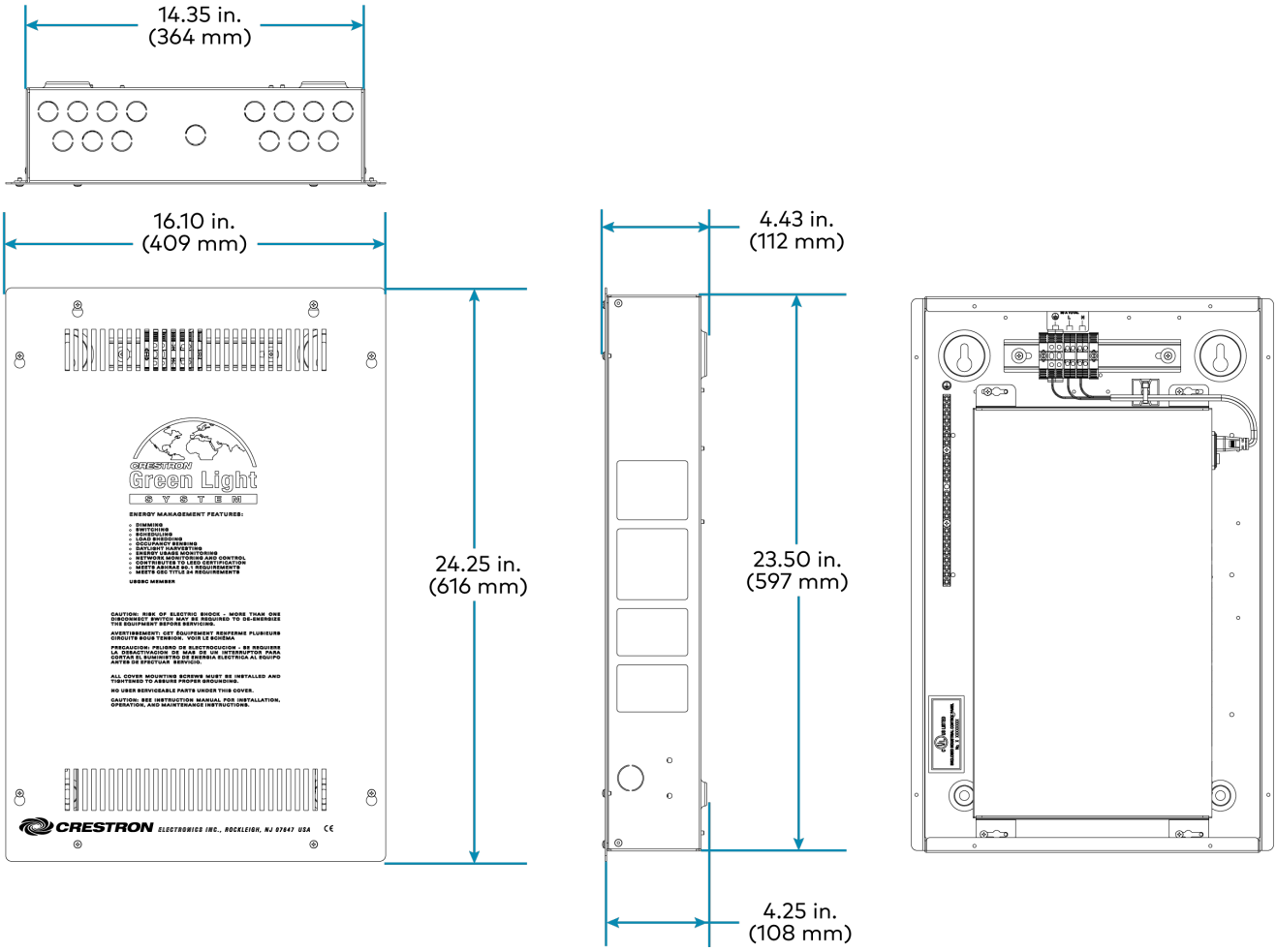

ZUM-HUB4 - Zūm Start-Up

The ZUM-HUB4 enables centralized management for Zūm commercial lighting systems of up to 1,000 rooms with an Ethernet switch across Zūm wired, Zūm wireless, and external spaces.

- Provides web-based user interface for easy configuration, control, scheduling, and monitoring
- Time clock for room lighting automation and sensing behavior
- Daisy-chain up to 20 Zūm Net wired load controllers (sold separately) via their built-in Zūm Net ports for room-to room communication
- Use with an Ethernet switch (sold separately) to support multiple Zūm Net daisy-chains up to 1,000 rooms
- Control Zūm spaces with the Zūm Hub software and a Custom program (not both)
- BACnet communication supports control for up to 9,000 BACnet objects
- Configure Zūm spaces via the Zūm App

SW-HUB4-PROG - Custom Program Start-Up

The SW-HUB4-PROG is a software license that activates the custom program slot on the ZUM-HUB4 control system.

- 100 max. Ethernet (or custom programmed Zūm Net devices) devices across both LAN and Control Subnet ports
- 200 max. Cresnet (or custom programmed Zūm Link devices) controlled/addressed from the Custom Program

> **NOTE:** Cresnet devices connected to a Zūm Net load controller or DIN-CENCN-2 do not count toward the 200 max. Cresnet.

- Control Zūm spaces with the Zūm Hub software or a Custom program (not both)
- Custom program slot supports 10,000 BACnet points

Wireless Device Notes

- Position the first ZUMMESH-NETBRIDGE within 100 ft of the ZUMNET-GATEWAY.
- Position the last ZUMMESH-NETBRIDGE within 250 ft of a ZUMNET-GATEWAY.
- Position subsequent ZUMMESH-NETBRIDGE devices within 100 ft of the previous ZUMMESH-NETBRIDGE.
- Acquire wireless devices in the same room to the same ZUMMESH-NETBRIDGE or ZUMNET-GATEWAY.
- Refer to Installation and Setup of Crestron RF Products (Doc. 6689).

ZUMNET-GATEWAY

- Building material and device quantity may impact gateway placement. Higher density material with fewer wireless devices may require additional gateways.
- Do not mount gateway devices closer than 15 ft from each other.
- Mount a gateway on the same floor as the wireless devices that are wirelessly connected to it.
- Mount a gateway at least 15 ft from Wi-Fi access points.
- Mount a gateway at least 15 ft from large metal objects to avoid RF shadows.
- Position the gateway antenna on a vertical plane.
- Avoid mounting a gateway on a metal surface. When mounting a gateway on a metal surface is unavoidable, mount the antenna on a horizontal plane.

Wireless Network Limitation

- 28 max. ZUMNET-GATEWAY devices
- 50 max. ZUMMESH-NETBRIDGE devices per gateway
- 1,000 max. rooms per ZUM-HUB4

Space Limitations

- 32 devices per ZUMMESH-NETBRIDGE or Zūm space
- Up to eight battery-powered keypads or sensors per Zūm space
- Up to 50 ft between devices per Zūm space
- Only one photosensor per Zūm space
- One ZUMMESH-NETBRIDGE per Zūm space
- One ZUMMESH-AVBRIDGE per Zūm space
- Up to six battery-powered devices per AC device
- Use multiple AC devices to achieve the battery-powered device maximums
- AC powered devices can expand the size of the peer-to-peer Zūm Mesh network. Battery-powered devices do not expand the Zūm Mesh network size.

Wireless Network Devices

Below are illustrations for the Zūm wireless network devices.

ZUMMESH-AVBRIDGE

Audio/video integration bridge

- 2-way serial up to 115.2K baud (TD/RD only)
- RF transceiver: 2-way RF
- 50 ft max. range
- 12-24VDC or USB3

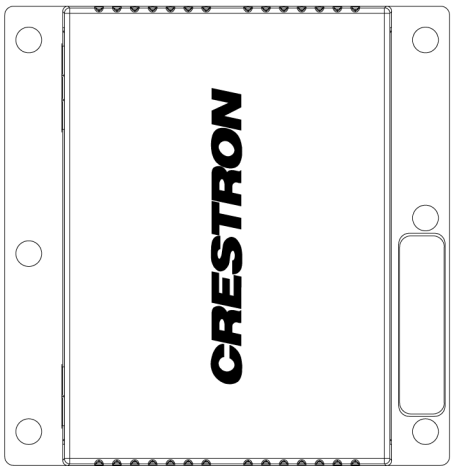

ZUMNET-GATEWAY

Wireless gateway

- Power pack: 0.75A @24VDC
- 100-240VAC, 50/60 HZ power pack, model PW-2420RU (sold separately)
- Power consumption: 2.1 W typical
- RF transceiver: 2-way RF
- Zūm Net range (typical): 150 ft indoor to nearest Mesh network device(s). 250 ft max. to furthest Zūm Net device.
- Supports up to 40 Zūm wireless spaces (ZUMMESH-NETBRIDGE devices)
- PoE recommended connection. Up to 100 M max. range.

ZUMMESH-NETBRIDGE

Networking bridge

- One required per space for networking and Zūm app configuration
- Connects to wireless junction box controllers
- Bluetooth low energy, version 4.0, pairs with a mobile device running the Zūm app
- RF transceiver: 2-way RF
- Zūm Mesh range: Up to 100 ft from one ZUMMESH-NETBRIDGE to another. Up to 250 ft from a ZUMNET-GATEWAY to the furthest ZUMMESH-NETBRIDGE.
- Connect to any Zūm Mesh junction box load controller

ZUMMESH-CCO

Contact closure output

- Rated 1A @ 30VDC or 24VAC
- Low-voltage SPDT form C contact closure

- Connect to any Zūm Mesh junction box load controller

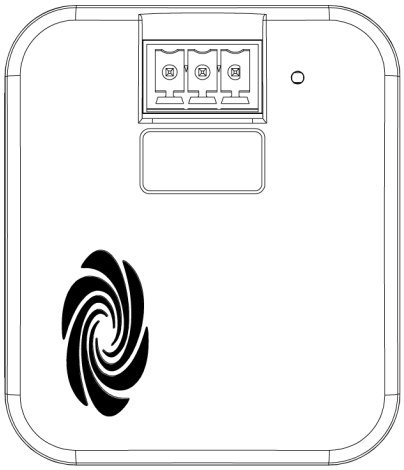

Sensor Integration Module

Below are illustrations for the Zūm wireless sensor integration module.

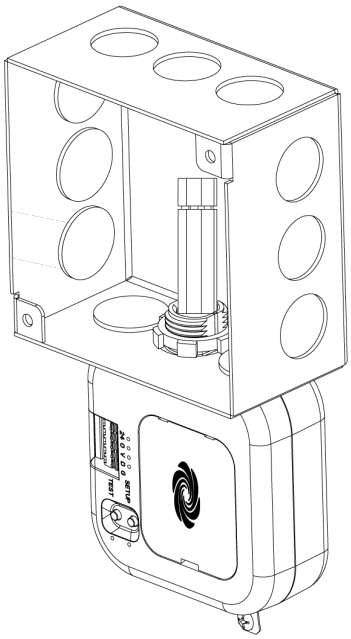

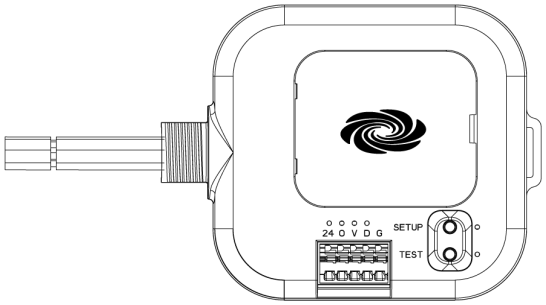

Manufacturer	Model	Max. Sensors
Crestron	GLS-ODT-C-NS	4
Crestron	GLS-OIR-C-NS	7
Steinel	IR Quattro HD COM2-24 (GLA-IR-QUATTRO-HD-COM2-24) IR Quattro HD COM1-24 (GLA-IR-QUATTRO-HD-COM1-24) IR CM COM2-24	7
Steinel	US Hallway COM1-24 (GLA-US-HALLWAY-COM1-24)	6
Steinel	US Hallway COM2-24 (GLA-US-HALLWAY-COM2-24)	5

ZUMMESH-JBOX-SIM

Sensor Integration Module

- Allows for non-wireless low-voltage sensors to be integrated into the Zūm wireless system
- 100-277VAC input only. No 100-277VAC output/relay
- Supports one or more 24VDC powered motion detection type sensors wired in parallel
- Requires a maintained DC high logic signal >8VDC, 24VDC max. when detecting occupancy (motion)
- Operates in either occupancy or vacancy mode depending on connection used
- Daylight supports a single 24VDC powered open-loop photosensor (photocell) type sensor
- Requires a 0-10VDC analog control signal to indicate the natural daylight level
- Output power: 250 mA @ 24VDC

Wireless Mesh Communication Battery-Powered Sensors

Below are illustrations for the Zūm Mesh wireless battery-powered sensors.

ZUMMESH-PIR-OCC-BATT

- Occupancy-only sensor
- Lithium-ion, Ultralife 9V Lithium battery
- 500 sq ft range
- Zūm Mesh communication

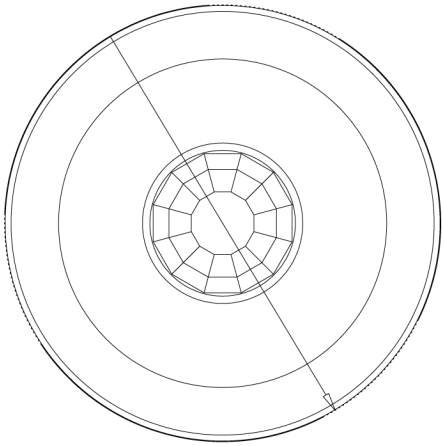

ZUMMESH-PIR-VAC-BATT

- Vacancy-only sensor
- Lithium-ion, Ultralife 9V Lithium battery
- 500 sq ft range
- Zūm Mesh communication

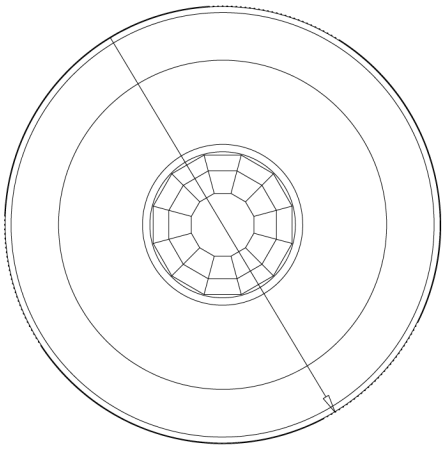

ZUMMESH-OL-PHOTOCELL-BATT

- Light sensitivity: 0-65535 lux
- (2) AAA Lithium-ion battery
- 500 sq ft range
- Zūm Mesh communication

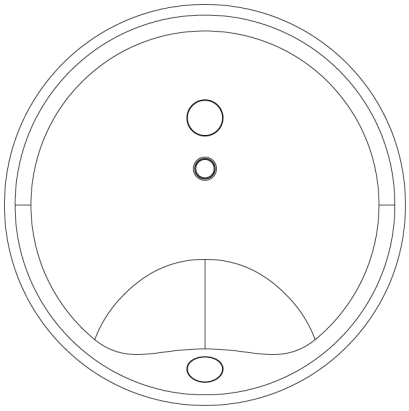

Wireless Mesh Communication Battery-Powered Keypads

Below are illustrations for the Zūm Mesh wireless battery-powered keypads.

ZUMMESH-KP10ABATT

- Single rocker switch
- One CR2032 coin cell battery
- Zūm Mesh communication

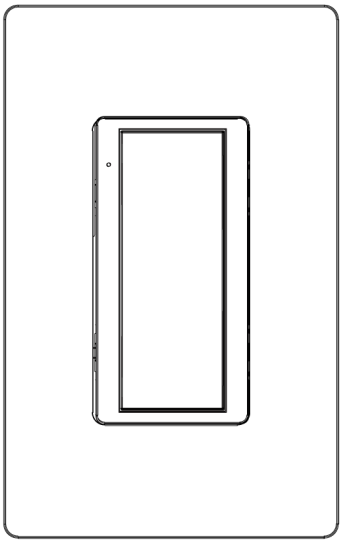

ZUMMESH-KP10BBATT

- Four-button keypad
- One CR2032 coin cell battery
- Zūm Mesh communication

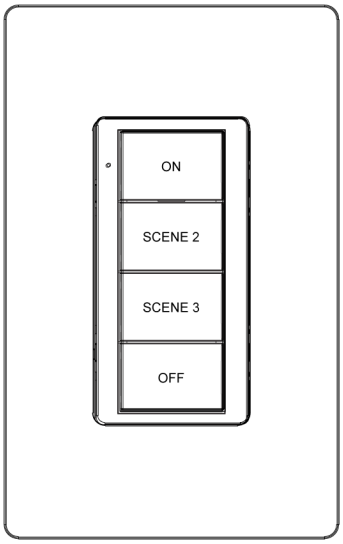

ZUMMESH-KP10CBATT

- Six-button keypad
- One CR2032 coin cell battery
- Zūm Mesh communication

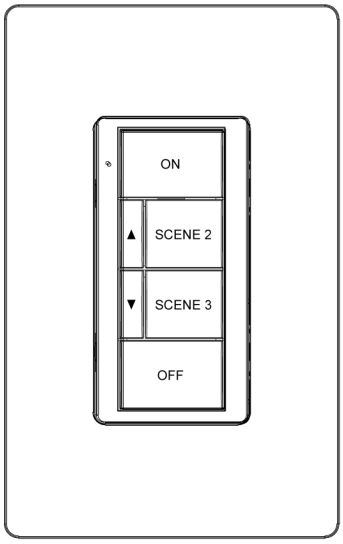

ZUMMESH-KP10DBATT

- Six-button keypad with sensor control
- One CR2032 coin cell battery
- Zūm Mesh communication
- Sensor Disable feature preconfigured for two hours of no sensor communications

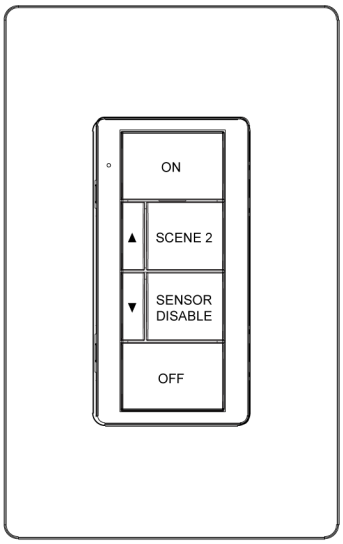

Typical Keypad Layouts

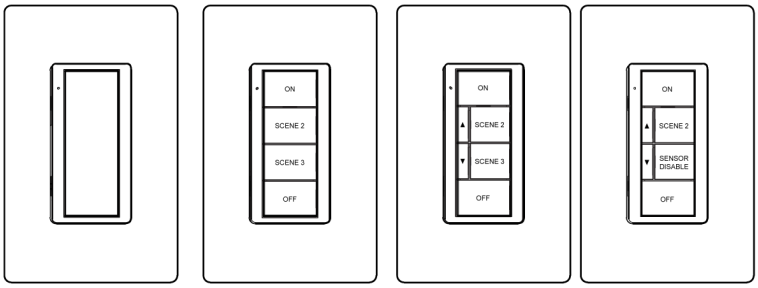

ZUMMESH-KP10A ZUMMESH-KP10B ZUMMESH-KP10C ZUMMESH-KP10D

Custom screen printing is available

Wireless Mesh Communication AC Powered Keypads

Below are illustrations for the Zūm Mesh wireless AC powered keypads.

ZUMMESH-KP10A

- Single rocker switch
- 120-277VAC, 60Hz
- Zūm Mesh communication

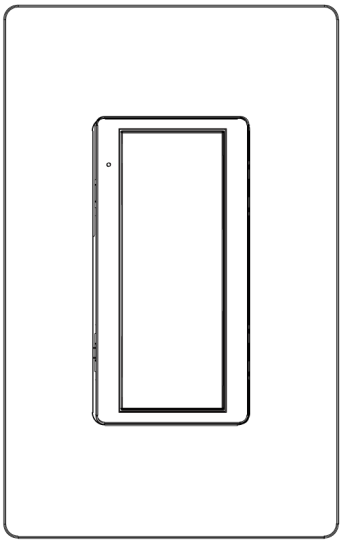

ZUMMESH-KP10B

- Four-button keypad
- 120-277VAC, 60Hz
- RF transceiver: 2-way RF

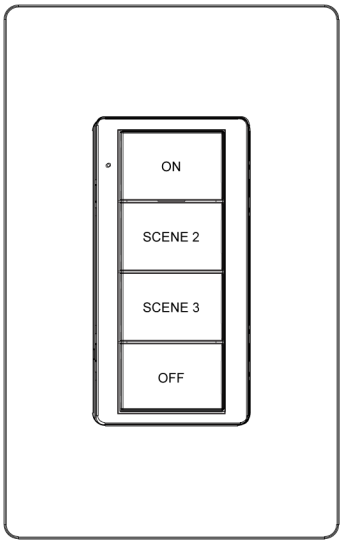

Typical Zūm Wireless Applications

Below are diagrams for typical Zūm wireless applications.

Wiring Key

1 Cresnet Cable:
(1) Pair 18 AWG,
(1) Twisted pair 22 AWG with shield
Non-plenum PN: CRESNET-NP-TL
Plenum PN: CRESNET-P-TL
Cresnet devices are limited to 20 per Cresnet run

2 DMX Cable:
Belden Standard 9729 or equal

3 Cable:
(1) Twisted pair 18 AWG
(1) Shield

3A Cable:
3 Conductor cable 18 AWG
(1) Shield

4 Cable:
CAT5E Ethernet
Ethernet devices must be home run

5 Suitable gauge wire to meet load requirements

Zūm Networking Hub

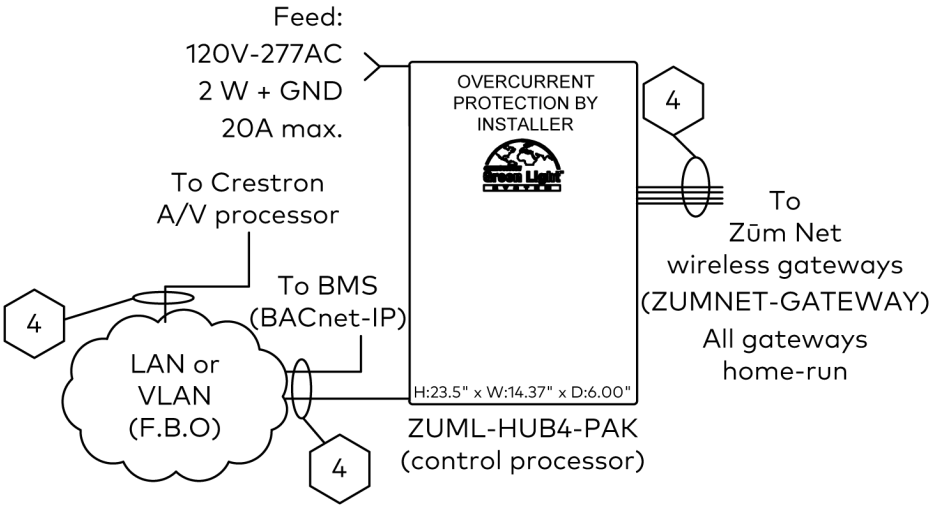

Zūm Gateway

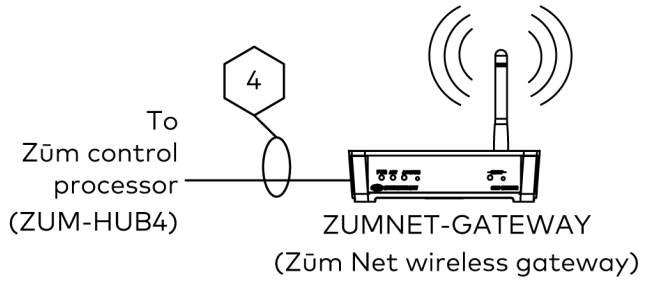
4
To
Zūm control
processor
(ZUM-HUB4)
ZUMNET-GATEWAY
(Zūm Net wireless gateway)

Control Interfaces

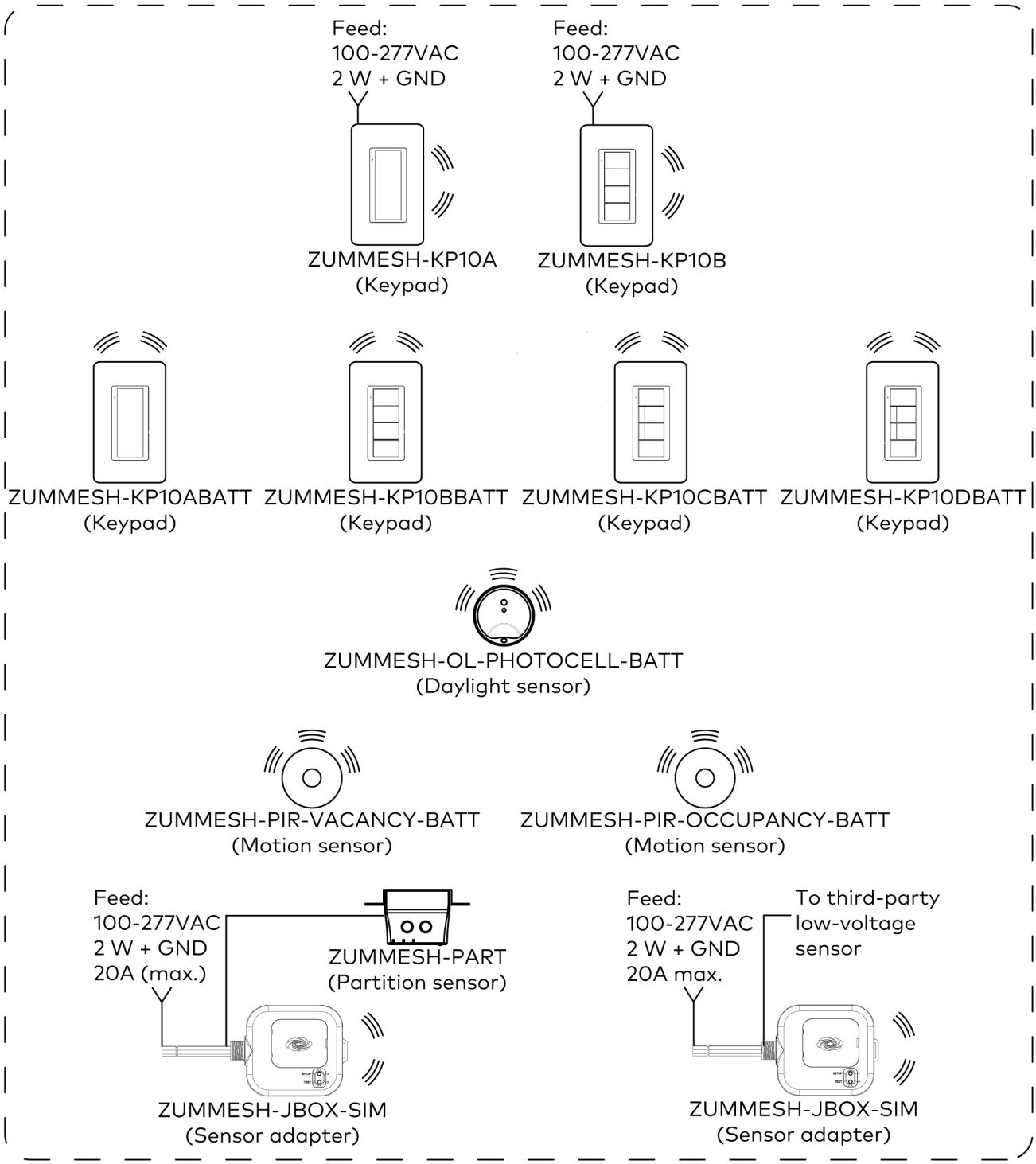

Zūm Mesh wireless: 2.4 GHz mesh 128-BIT AES encryption

Wallbox Load Control Devices

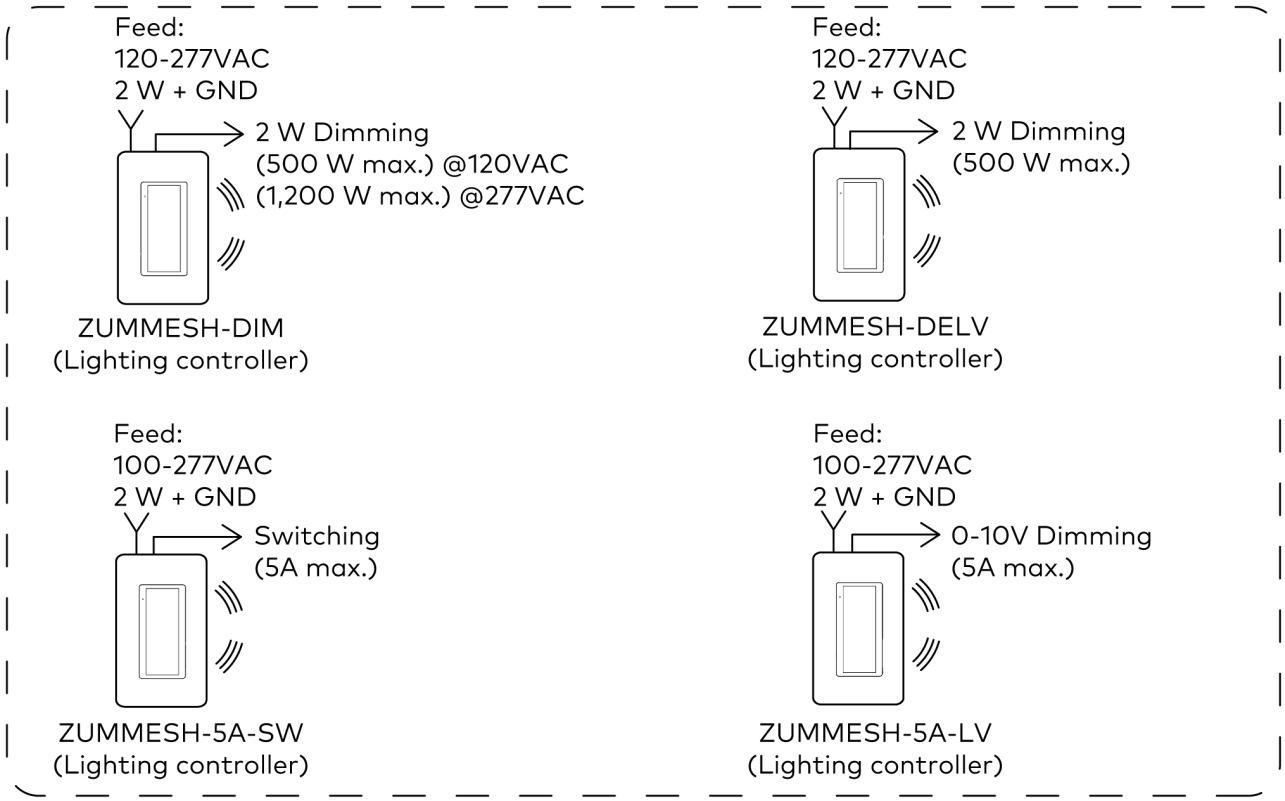

Zūm Mesh wireless: 2.4 GHz mesh 128-BIT AES encryption

Junction Box Load Control Devices

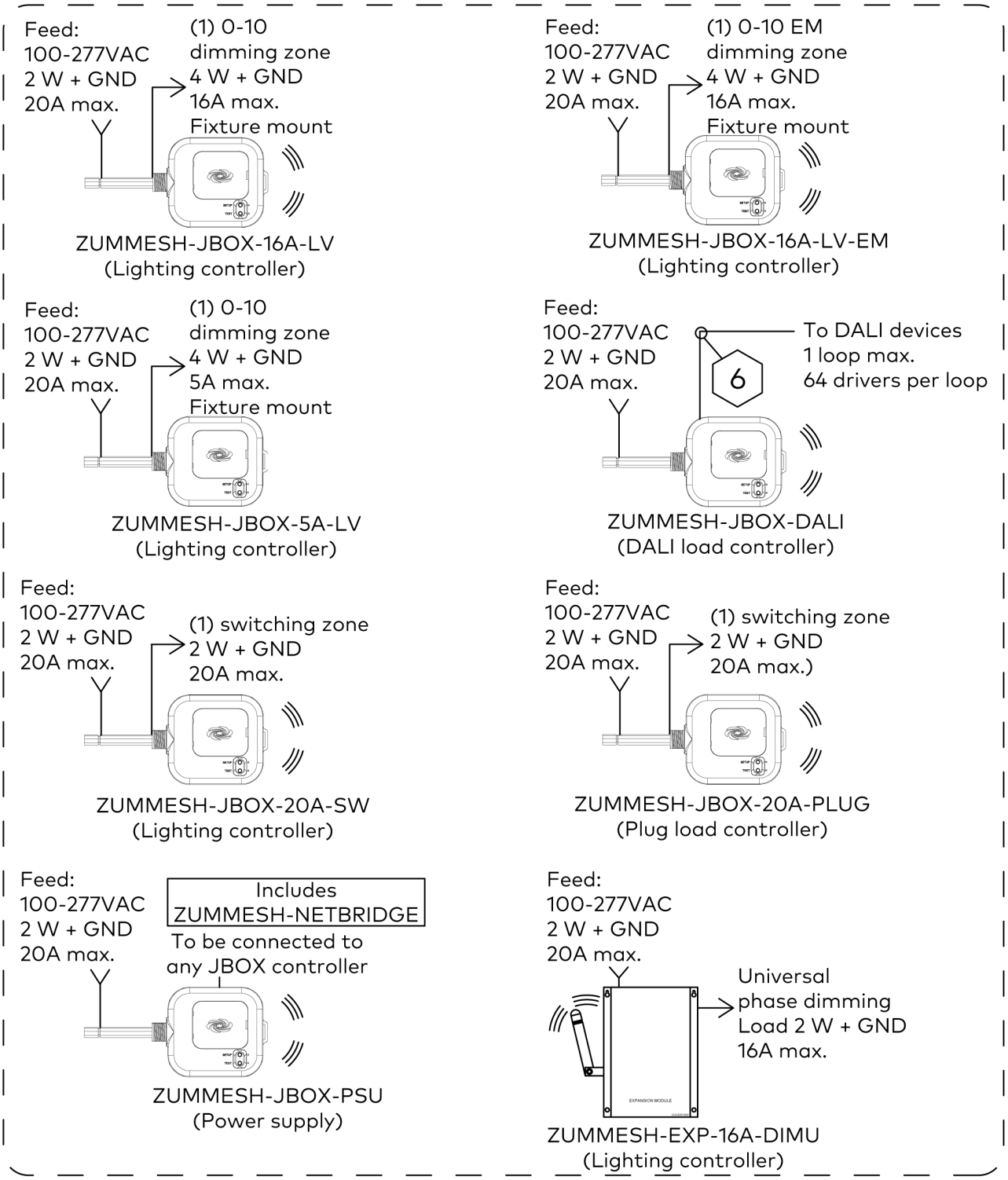

Zūm Mesh wireless: 2.4 GHz mesh 128-BIT AES encryption

Crestron Electronics, Inc.
15 Volvo Drive, Rockleigh, NJ 07647
Tel: 888.CRESTRON
Fax: 201.767.7656
www.crestron.com

Product Manual — Doc. 9349J
03/15/24
Specifications subject to
change without notice.